Budapest Metro line 5 Project

Urban Tunnel Project

Underground Construction Technologies

Spring semester 2011-2012

Gerardo
BASTERRECHEA

Elise
MASSOT

TABLE OF CONTENTS

1. INTRODUCTION 5

2. ALIGNMENT AND LONGITUDINAL PROFILE OF THE METRO LINE 6

2.1. ALIGNMENT CHOICE 6

1.1.1. Establishment of three different alignments 6

1.1.2. Multi-criteria analysis 7

1.1.3. Alignment chosen: positive points and risks 12

2.2. LONGITUDINAL PROFILE CHOICE 14

2.2.1. Underground Conditions 14

2.2.2. Technical constrains 17

2.2.3. Longitudinal profile chosen 17

3. CONSTRUCTION: EXCAVATION METHOD AND PLANNING 20

3.1. EXCAVATION METHOD CHOICES 20

3.1.1. Tunnels excavation 20

3.1.2. Supply site excavation 22

3.1.3. Station excavation 22

3.1.4. Cross passages and crossover excavation 26

3.1.5. Ventilation installation excavation 27

3.2. NECESSARY GROUND IMPROVEMENT, WATER MANAGEMENT AND SUPPORTS 27

3.2.1. Temporary Actions 27

3.2.2. Permanent Actions 30

3.3. EXCAVATION PLANNING 33

3.3.1. Excavation times for the different elements of the metro line 33

3.3.2. Excavation management 35

4. LIFECYCLE: MAINTENANCE PLAN 39

5. CONCLUSION 41

6. LIST OF FIGURES AND TABLES 42

1. INTRODUCTION

The Budapest metro system is one of the oldest underground metros in the world. Its Line 1 dates from 1896, and was declared a World Heritage Site in 2002. The Metro consists of three lines, each designated by a number and a color. Metro Line 4 is currently under construction; the first section is scheduled to open in 2014. All those lines are represented in the map in the Figure 1.

- Line 1 (yellow line) runs northeast from the city center to City Park along Andrássy Avenue.
- Line 2 (red line) runs generally east to west from the transit hub Örsvezér Square on the city's east side, and provides a connection between Keleti railway terminal and Délirail way terminal through the city center.
- Line 3 (blue line) runs northwest from the transit hub KobányaKispet in the city's southeast, along Üllői Avenue to the city center, and then north to the district of Újpest.

Except for short stretches near the depots of each line, the system is mostly underground. All lines converge at DeákFerenc square in the city center, forming the system's only transfer station. This bottleneck is to be solved by the opening of Line 4, which will cross Line 2 and Line 3 at different stations.

Figure 1: Map of the current Metro lines in Budapest

Line 4 (green line) will run southwest to northeast from the transit hub of Budapest Kelenföld railway station in the city's most populous district of Újbuda across the inner city district of Józsefváros to Keleti railway terminal.

Even though Line 2 of the Metro provides transfers to the terminals of two of the four HÉV lines, the metro forms a separate system from the Budapest HÉV commuter rail. Integration of the incompatible HÉV system into the Metro is a long-term goal, and forms the basis of our project, the proposed Line 5.

The project consists in the planning of the construction and maintenance of the metro line 5. For this, we designed both the alignment of the line and its longitudinal profile, for which we planned an excavation schedule. The final covering and the maintenance plan were also designed for the life cycle of the tunnel.

2. ALIGNMENT AND LONGITUDINAL PROFILE OF THE METRO LINE

2.1. ALIGNMENT CHOICE

The scope of a metro line is defined by its alignment: what places will it serve and the path it will take to connect those places; therefore, it was the first step of the project. As the main objective of such a project is the quality of the service to be provided, recommended station sites were given. The desired stations required for optimal service are shown in Figure 2. It can be noted below that the metro line has to forcedly cross the Danube River, serving the island, then cross again towards the city center and then, near the end of the line, has to separate into two lines, one going along the canal and the other one crossing the canal.

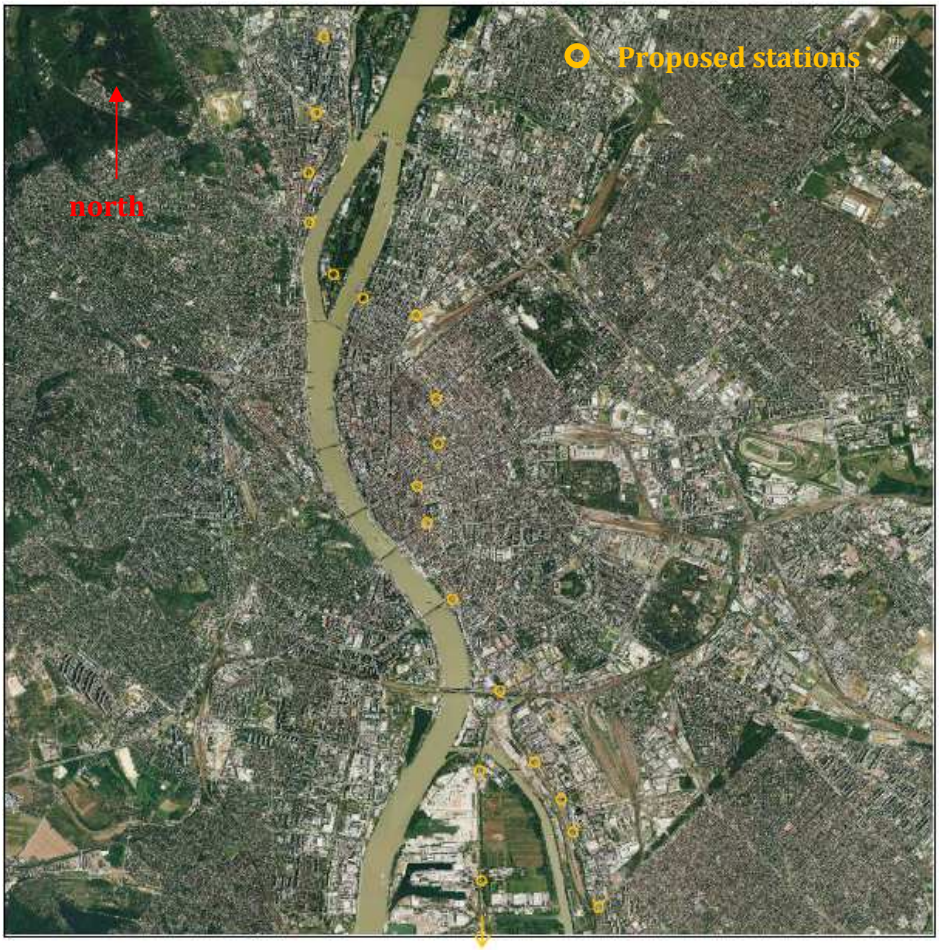

Figure 2: Wished service for the metro line 5

However, the alignment choice has also an important impact on the construction time and the project budget. Therefore, it was important to first design three different alignments, each one trying to fulfill the same quality of service, but with different approaches. Then, by using a multi-criteria analysis, one alignment out of the three was to be chosen. That process is described in the paragraph below, and is followed by an analysis of the selected final alignment.

1.1.1. ESTABLISHMENT OF THREE DIFFERENT ALIGNMENTS

The designing of a metro alignment is not only determined by in terms of its service goal, economics and construction time. It has also to follow some technical and construction constrains that are mentioned below:

- Minimal horizontal radii of the main tunnel: 500m
- The stations should be straight, 140m long
- Provide supply sites as often as needed, with main road or rail access, out of residential area

Knowing those constrains, we proposed 3 different alignments (Figure 3):

- The first one is designed to exactly serve the stations proposed: it is the service that counts the most.
- The second one is designed to be the straightest one. Indeed, it should make the alignment shorter and the construction easier and quicker. Furthermore, for this alignment, we decided to suppress the stations that, in our opinion, seemed less important, such as stations close to other main stations that serve as a service node.
- The third one takes into accounts the fact that we have to cross the Danube River. But passing under the Danube River might be risky during the construction, inducing extra cost and time. Furthermore, passing under the Danube would have mean going very deep, were hydrostatic, soil pressure and groundwater risks are high. Then for this alignment we pass over the Danube River by using the existing bridge.

From Figure 3, it can be seen that some stations were moved for the alignments 2 and 3. However, we tried to leave them as near as possible to the original stations and to service nodes. Therefore, it can be seen that all the alignments follow closely the original service requirements.

Concerning the supply sites, 2 were selected and were used for all the 3 alignments. However, the distance from the tunnel to the supply site can vary, inducing more construction time and costs. Those supply sites are also shown in Figure 3. A third could have been chosen, at Flórián tér station, but because it was a park, we ultimately decided not to use it in order avoid disturbing urban life as much as possible.

Knowing the 3 alignments, one out of them had be selected as the final alignment, or at least to be a base of it.

1.1.2. MULTI-CRITERIA ANALYSIS

In order to objectively compare the three possible alignments, a multi-criteria analysis followed by a sensibility analysis has been done.

The alignments were compared in terms of level of service, functional aspects, topographical aspects, geological aspect, economic aspect and environmental aspects.

However, to evaluate the geological, the topographical and the economic aspects, a draft longitudinal profile of the alignments should be known. That is why we designed draft longitudinal profiles:

- 2 different longitudinal profiles were designed for both alignments 1 and 2. One going deeper than the other one, but going through better soil.
- 2 different longitudinal profiles were designed for the alignment 3.

The way the longitudinal profiles were designed and the geological matters are explained in Section 2.2. exposes the different profiles that were drawn. Some paths are commonly used by different longitudinal profiles. The detailed analysis for those profiles will not be exposed in this report, and only the final longitudinal, established in Section 2.2 will be discussed

One these initial choices were made, different aspects for the comparison of the alignments can be evaluated.

Table 1 summarizes the aspects chosen for the comparison of the alignments and how the alignments were evaluated for each criterion. The

Table 2 gives an example of the application of the multi-criteria analysis.

Generally, either the evaluation was quantitative, and the grade given was following a linear law or the evaluation was qualitative, and the grade was given between 0 and 3. Indicative weights are also mentioned. This aims only at showing the weighting principle. Indeed, a sensibility analysis will be carried out to select the alignment. Each evaluated aspects were weighted out of 100 point. Then, for each aspect evaluated, the evaluating criterion was weighted.

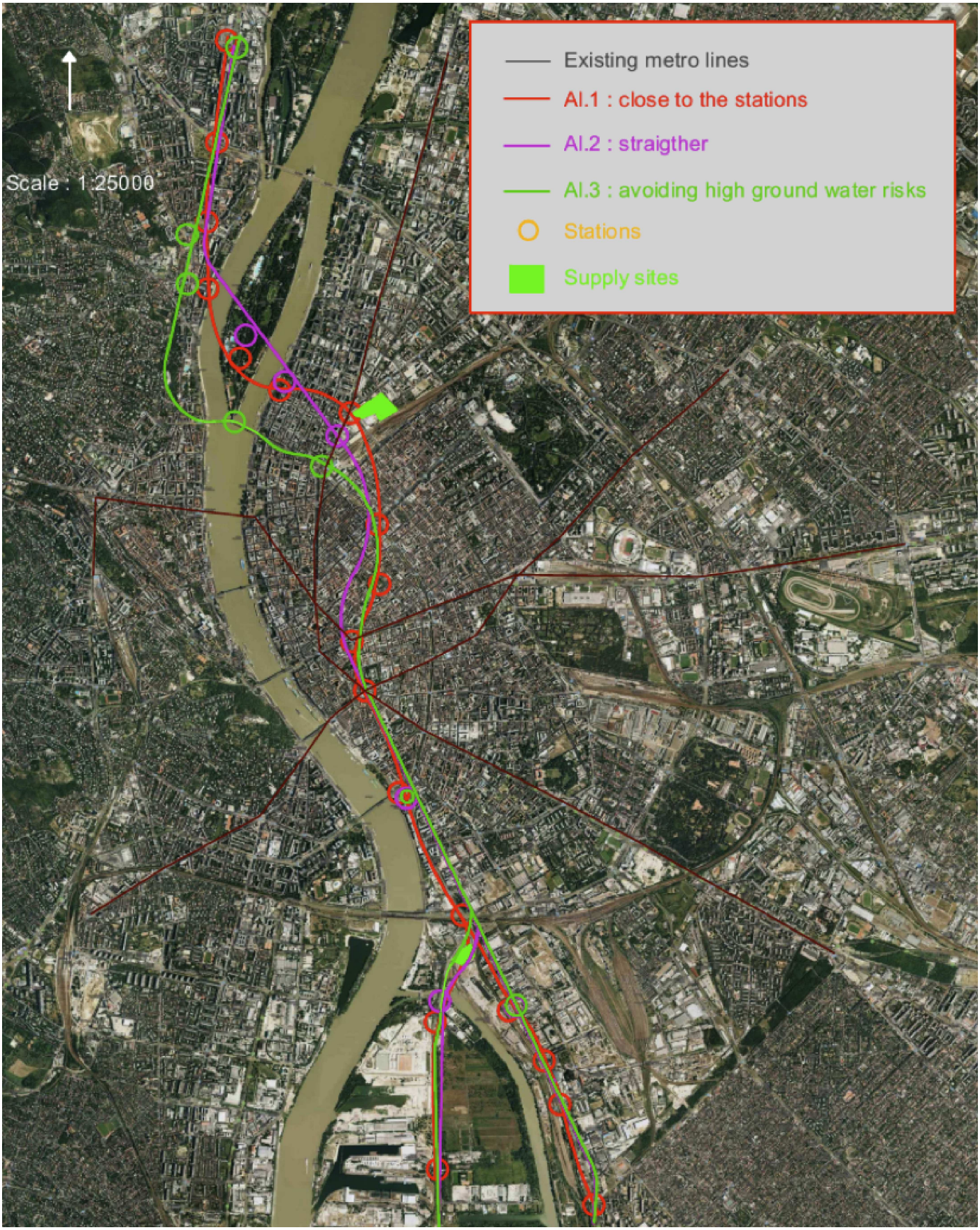

Figure 3: The 3 proposed alignments

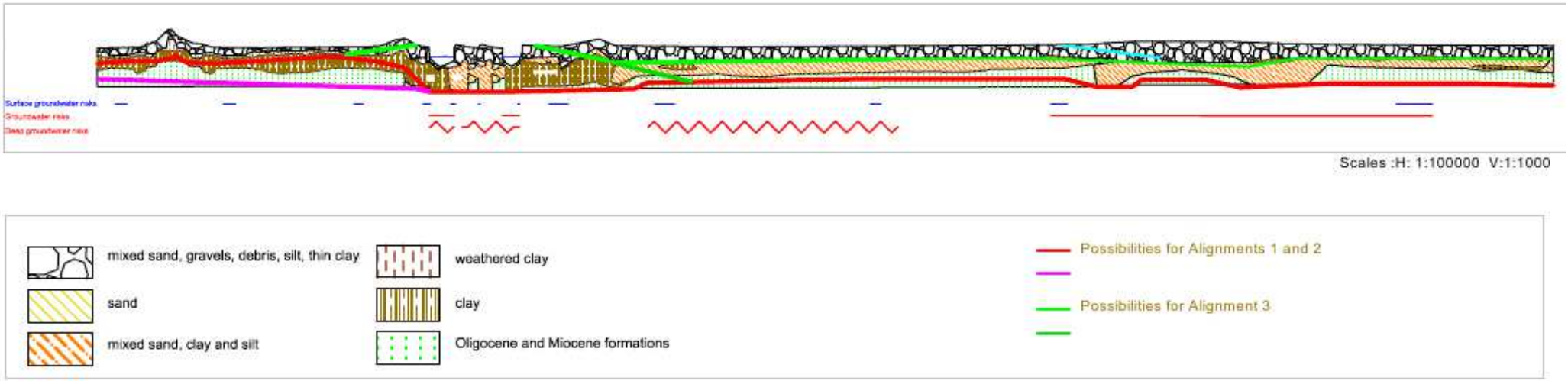

Figure 4: Draft Longitudinal profiles designed for the multi-criteria analysis; refer to part 2.2 for geological matters

Evaluated aspects	Evaluating criteria	Mesure taken	Weight
Functional	**Adits**	Minimum length to the alignment [m]	2,8
	Connectivity with existing infrastructure	Number of connections between stations and railways and highways	8,3
		Subtotal Functional	11,1
Topography	**Linearity of the alignment**	Number of curves in the alignment	3,3
		Average of the curves radii [m]	5,6
	Slope	Total length with 1,2% declivity in the longitudinal section [m]	2,2
		Subtotal Topography	11,1
Geology	**Part of the tunnel in rock**	% of the length of the tunnel passing through rock [m]	0,0
	Part of the tunnel in clay	% of the length of the tunnel passing through clay [m]	5,6
	Groundwater relative risks	Qualitative: depending on the soil (the value (0 to 5) is low when the risk is low)	2,8
	Surface water relative risks	Qualitative: depending on the soil (the value (0 to 5) is low when the risk is low)	2,8
	Changing and crossing different soil types	Number of soil type changes along the longitudinal section	5,6
	Part of the tunnel in failed soil	% of the length of the tunnel passing through highly failed soil [m]	5,6
		Subtotal Geology	22,2
Economics	**Outside line**	Bridges lenght [m]	2,2
	Length of the line	Total line lenght [m]	6,7
	Depth of the line	Average line depth [m]	5,6
	Stations building	Number of stations	2,2
		Distance from train to station entrance [m]	5,6
		Subtotal Economics	22,2
Social and Environment	**Noise and vibrations during construction**	Qualitative: graded from 0 to 3 : from low noise and vibrations to high ones	3,3
	Noise and vibrations during operation	Qualitative: graded from 0 to 3 : from low noise and vibrations to high ones	7,5
	Accessibility	Number of stations	5,0
		Distance from original stations	5,0
	Connectivity with existing infrastructure	Number of connections with the existing public transports	5,0
	Destruction of the environment	Number of station/adits placed where it destruct a living place	7,5
		Subtotal Social/environment	33,3
		Total	100,0

Table 1: Basis for the multi-criteria analysis

Evaluated aspects	Evaluating criteria	Weight	Evaluation for the different alignment-longitudinal profile combinations																	
			Alignment 1, shallow			Alignment 1, deep			Alignment 2, shallow			Alignment 2,deep			Alignment 3 (2 bridges)			Alignment 3 (1 bridge)		
			Value	Grade	Factor score	Value	Grade	Factor score	Value	Grade	Factor score	Value	Grade	Factor score	Value	Grade	Factor score	Value	Grade	Factor score
			y_{11}	x_{11}		y_{12}	x_{11}		y_{n2}	x_{21}		y_{n2}	x_{22}		y_{n3}	x_{31}		y_{n3}	x_{32}	
Functional	Adits	2,8	87	5,00	13,89	87	5,00	13,89	320	3,24	9,01	320	3,24	9,01	750	0,00	0,00	750	0,00	0,00
	Connectivity with existing infrastructure	8,3	14	5,00	41,67	14	5,00	41,67	12	0,00	0,00	12	0,00	0,00	13	2,50	20,83	13	2,50	20,83
	Subtotal Functional	11,1			**55,56**			**55,56**			**9,01**			**9,01**			**20,83**			**20,83**
Topography	Linearity of the alignment	3,3	17	0,00	0,00	17	0,00	0,00	6	5,00	16,67	6	5,00	16,67	13	1,82	6,06	13	1,82	6,06
		5,6	1824	5,00	27,78	1824	5,00	27,78	703	0,00	0,00	703	0,00	0,00	715	0,05	0,30	715	0,05	0,29
	Slope	2,2	373	2,15	4,78	128	5,00	11,11	373	2,15	4,78	128	5,00	11,11	558	0,00	0,00	362	2,28	5,06
	Subtotal Topography	11,1			**27,78**			**27,78**			**16,67**			**16,67**		**1,87**	**6,36**		**1,87**	**6,35**
Geology	Part of the tunnel in rock	0,0	0	0,00	0,00	0	0,00	0,00	0	0,00	0,00	0	0,00	0,00	22	5,00	0,00	0	0,00	0,00
	Part of the tunnel in clay	5,6	100	5,00	28,00	100	5,00	28,00	100	5,00	28,00	100	5,00	28,00	63	1,74	9,73	43	0,00	0,00
	Groundwater relative risks	2,8	5	0,00	0,00	4	1,25	3,47	5	0,00	0,00	4	1,25	3,47	1	5,00	13,89	2	3,75	10,42
	Surface water relative risks	2,8	2	3,00	8,33	0	5,00	13,89	2	3,00	8,33	0	5,00	13,89	5	0,00	0,00	4	1,00	2,78
	Changing and crossing different soil types	5,6	11	4,29	23,81	9	5,00	27,78	11	4,29	23,81	9	5,00	27,78	23	0,00	0,00	21	0,71	3,97
	Part of the tunnel in failured soil	5,6	34	4,86	27,01	22	5,00	27,78	34	4,86	27,01	22	5,00	27,78	453	0,00	0,00	52	4,66	25,89
	Subtotal Geology	22,2			**87,15**			**100,92**			**87,15**			**100,92**			**23,62**			**43,06**
Economics	Outside line	2,2	0	0,00	0,00	0	0,00	0,00	0	0,00	0,00	0	0,00	0,00	1150	5,00	11,11	677	2,94	6,54
	Length of the line	6,7	15424	5,00	33,33	15424	5,00	33,33	15634	4,11	27,43	15634	4,11	27,43	16609	0,00	0,00	16609	0,00	0,00
	Depth of the line	5,6	7,7	5,00	27,78	29	0,00	0,00	7,7	5,00	27,78	29	0,00	0,00	7,7	5,00	27,78	7,7	5,00	27,78
	Stations building	2,2	19	0,00	0,00	19	0,00	0,00	17	2,13	4,73	17	2,13	4,73	16	3,19	7,09	14	5,00	11,11
		5,6	277	3,94	21,90	277	3,94	21,90	1308	0,00	0,00	1308	0,00	0,00	437	3,33	18,50	0	5,00	27,78
	Subtotal Economics	22,2			**83,01**			**55,23**			**59,93**			**32,15**			**64,48**			**73,21**
Social and Environment	Noise and vibrations during construction	3,3	2	4,51	15,02	2	4,51	15,02	2	4,51	15,02	2	4,51	15,02	2	5,00	16,67	3	0,00	0,00
	Noise and vibrations during operation	7,5	1	5,00	37,50	1	5,00	37,50	1	5,00	37,50	1	5,00	37,50	1	4,59	34,46	2	0,00	0,00
	Accessibility	5,0	19	5,00	25,00	19	5,00	25,00	17	4,38	21,89	17	4,38	21,89	18	4,69	23,45	3	0,00	0,00
		5,0	209	5,00	25,00	209	5,00	25,00	979	2,54	12,68	979	2,54	12,68	1771	0,00	0,00	1771	0,00	0,00
	Connectivity with existing infrastructure	5,0	34	0,00	0,00	34	0,00	0,00	35	0,71	3,57	35	0,71	3,57	41	5,00	25,00	41	5,00	25,00
	Destruction of the environment	7,5	5	1,67	12,50	5	1,67	12,50	6	0,00	0,00	6	0,00	0,00	3	5,00	37,50	5	1,67	12,50
	Subtotal Social/environment	33,3			**115,02**			**115,02**			**90,66**			**90,66**			**137,07**			**37,50**
	Total	100,0			**368,52**			**354,5**			**263,42**			**249,41**			**252,36**			**180,95**

Table 2: Example of application of the multi-criteria analysis for given weights.

For the sensibility analysis, while the weights of the general aspects were varied, the weighting for each criterion of each aspect remained constant. As the main aspects were economics, geology and social and environment, we decided to keep 2/9 of the total weight for the functional and the topographical aspects, and to make vary significantly the weight for geology, economics and social and environment. Indeed, those aspects are the ones whose influence can vary significantly depending on the background of the decision-makers: engineers, politics, banks, etc.

1.1.3. ALIGNMENT CHOSEN: POSITIVE POINTS AND RISKS

Table 3 shows the essential of the sensibility analysis. However, only the extremes cases tested are shown. Finally, the alignment that always arrives in the first or in the second position is the alignment 1, with the longitudinal profile passing in clay in the northern part of the metro line.

		Final Grades					
		Alignment 1, shallow	Alignment 1, deep	Alignment 2, shallow	Alignment 2, deep	Alignment 3 (2 bridges)	Alignment 3 (1 bridge)
Subtotal Functional	11,1	363	342	263	242	200	214
Subtotal Topography	11,1						
Subtotal Geology	33,3						
Subtotal Economics	33,3						
Subtotal Social/environment	11,1						
Subtotal Functional	11,1	380	346	264	229	278	196
Subtotal Topography	11,1						
Subtotal Geology	11,1						
Subtotal Economics	33,3						
Subtotal Social/environment	33,3						
Subtotal Functional	11,1	357	363	263	270	227	166
Subtotal Topography	11,1						
Subtotal Geology	33,3						
Subtotal Economics	11,1						
Subtotal Social/environment	33,3						

Table 3: Summary of the sensibility analysis

Alignment 1 is in fact the shortest one (12.85km from the north section to the end of the longest south section), and the one that provides the best service. As it stays underground, there is no disturbance to the urban life. Furthermore, the longitudinal profile is the optimized one, passing through good soil but staying as much as possible at shallower depths.

On the basis of this alignment, we had to choose how to place several elements that are needed for construction and security matters.

First, as we will explain it in Section 3.3, we will have one tunnel per track, so 2 tunnels. For that reason, a crossover that allows a train to go from one tunnel to the other one is needed at least each 7.5 km. As the tunnel is 12.85km, only one cross over is needed. But for security reasons, as the metro line is separated in two sections at the end of the line, we decided to place one cross over just at the separation of the tunnel. Moreover, we tried to put the cross over as close as possible to supply sites, so that mucking will be easier. Furthermore, cross-passages between the tunnels are needed at least each 300m. As stations can be considered as cross passages, we just search to minimize the number of cross-passages.

Then, ventilations shafts have to be provided at least each 1km. Because a station provides ventilation to the system, only for the section between stations longer than 1km, a ventilation shaft will have to be built. The shafts' sites were chosen to be as close as possible to the metro line. However, they would also have to have some free space at the surface (street corners for instance), since a ventilation shaft is roughly 4m in diameter.

Finally, the surface access sites for the underground stations have to be chosen. As we will see later, some accesses are built with a shaft, and some other ones are using cut and cover. The choice between a shaft or a cut and cover is detailed in Section 3.1. The sites were chosen such that there is enough space to carry out the method chosen and to avoid as much as possible the disturbance of urban life.

This alignment is shown in Figure 5, together with all the elements needed.

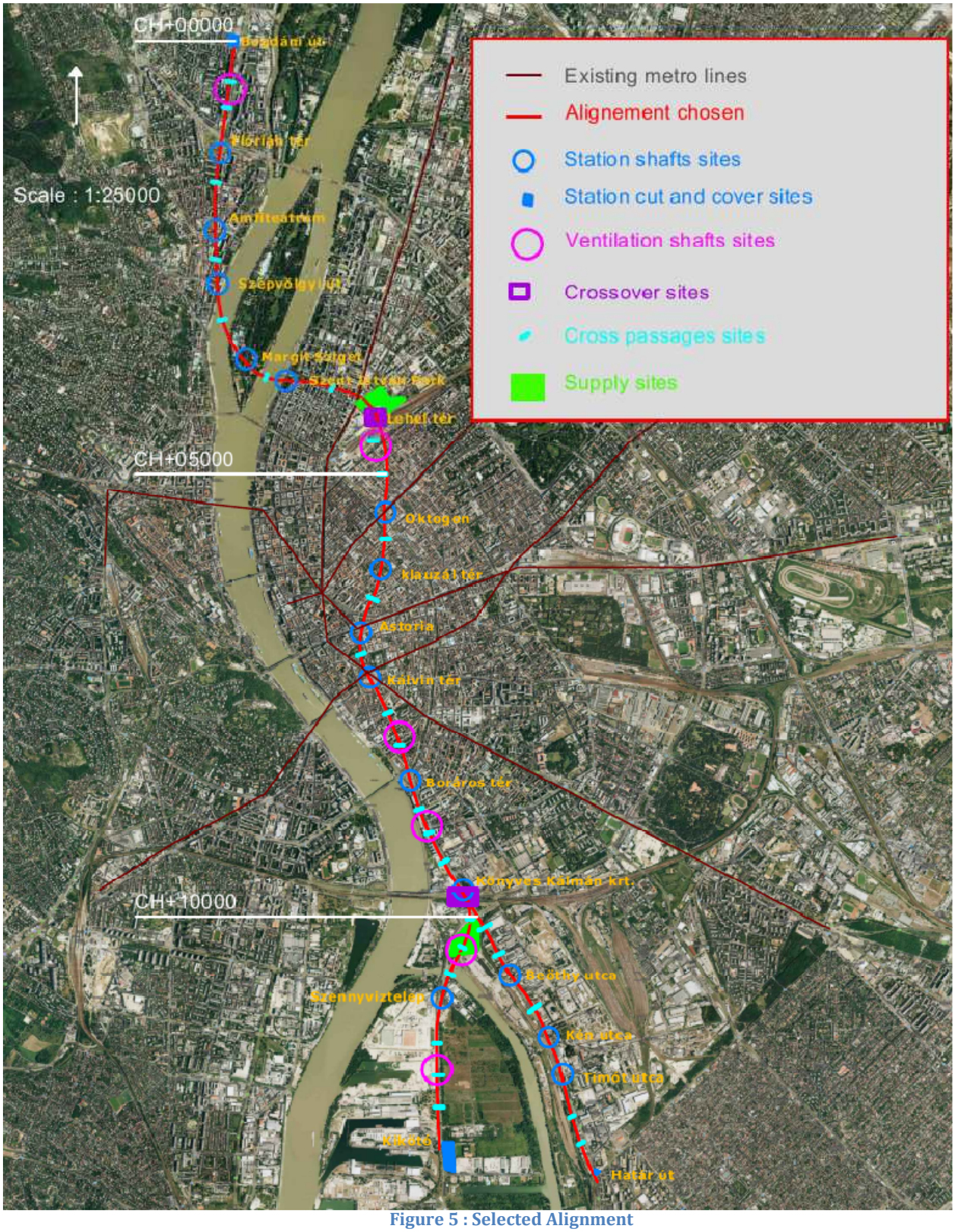

Figure 5 : Selected Alignment

2.2. LONGITUDINAL PROFILE CHOICE

The longitudinal profile choice is based both on natural ground characteristics under Budapest City and on technical data. We will first expose the underground conditions and how we should take it into account. Then the technical features to take into account will be presented. Finally, the solution found for the longitudinal profile will be described.

2.2.1. UNDERGROUND CONDITIONS

General considerations

The main characteristics of the ground through which the metro shall pass are:

- The ground is composed of only soil
- There is the Danube Riverto cross and to go along.

That first led us to draw some general risks to avoid, which will set principles for the design.

First of all, there is risk of having water inflows and high hydrostatic pressure. Those risks, when passing thought a critical zone should be avoided by:

- Passing through a low permeability ($k<10^{-8}$m/s or at least $k<10^{-6}$m/s) ground, in order to avoided water inflow
- Limiting the number of fails troughs which we have to pass to avoid huge water inflows
- Trying to be as less as possible under the water table level in order to reduce the hydrostatic pressure, and so both the water inflow risks and the constrains on the tunnel
- Pass through a soil providing fair cohesion (c>100 kPa) that can resist the hydrostatic pressure

Those principles should be respected, since, as the ground is composed only of soil, a water inflow with high pressure could induce swelling. Furthermore, high hydrostatic pressure, if there is not the appropriate ground improvement or ground supports can provoke deformations of the tunnel and even collapse.

The fact that the tunnel has to pass through soil indicates also to us that there are high risks of settlement at the surface. Here, the tunnel is constructed under a city, with many above ground facilities; avoiding settlement is thus a critical requirement. Thus, to avoid making too much ground improvement and supports, we should make pass the tunnel through soil providing the best friction angle and cohesion. It has to be added that swelling implies also settlement, so that avoiding water problems is even more important to take into account.

It has to be kept in mind that the less risks are taken at the design process, the less expensive will be the tunnel. In fact:

- A risk means a probability of something unexpected to happen and so a probability to lose money and time
- If there are risks, they should be reduced by taking preventive measures: ground improvement, ground support and water management, both during the construction and the life cycle of the tunnel
- The risks can have more or less important impacts depending on the excavation method (e.g. Open face shield TBM versus Compressed air shield TBM), but the more the excavation will have to handle risks, the more it will be expensive.

Description of the ground conditions

The Figure 6represents a simplified profile of the underground conditions through which the tunnel will have to cross. All the average characteristics of the different type of soils are indicated: Cohesion, friction angle, permeability, density, and also RMR, in order to have an understanding about the global quality of the soil (fracturing, etc.)

On the whole, it can be noticed that the underground is composed of several type of soil with varying properties. From bottom to up:

- The Miocene and Oligocene formations provide good permeability and cohesion with a minimum friction angle of 20°. However, they are highly fractured (RQD=0), especially in the longitudinal direction. Furthermore, those formations are found at not less than 20m deep.
- The Clay, which is found especially on the right bank of the Danube River, has the same properties as the Oligocene and Miocene formations, even thought the cohesion and the permeability are a bit worse.
- Mixed grounds composed of weathered clay, silts, etc., have highly variable properties. Thus, the different geological values they can have at one point can vary significantly some meter further. Thus only the worst properties values should be taken into account for these type of soil, in order to avoid any risks due o a high variation of geological properties.
- Totally non-cohesive soil can be found at the surface, down to 15m at maximum.

It's easily observed that the water level is high, generally at 15m of depth. That means that the good quality soils, which are the clay and the Oligocene and Miocene formations, are under the water level. The zones that present water related risks are indicated on the Figure 6. The risks are related to Danube river water, but also to over formations inducing deep and surface water risks.

The previously enounced principles, related to water and settlement problems, by knowing the types of soil and the water risk zones can be applied. However, further principles have to be respected regarding the detailed geological profile, in order to have the less geological problems to manage during the construction and the lifecycle of the tunnel:

- The tunnel should be excavated following the fractures. Thus, crossing a fracture will be avoided. Indeed, crossing a fracture may induce stability problems for the tunnel, with a discontinuity of the stresses. Furthermore, as said before, crossing a fracture while being in a water inflow risked zone avoids water swelling.
- The tunnel path should avoid changes in soil properties, and each cross section of the tunnel should be in a homogeneous soil. Indeed, sudden changes in ground properties induces sudden change in constrains for the tunnel and in excavation conditions, which have to be managed in advance to avoid any risks due to the new properties expected. Thus, it should be avoid passing through soils with highly variables properties and avoid often changing in layers.
- Finally, the tunnel should not be too deep. Indeed, that provokes high in-situ stresses, due both to soil density and water.
- Generally speaking, it should be considered that the more the soil is good for providing support itself, the more it is fitted to make the tunnel excavation through it.

It can be noticed that on the one hand, it is recommended to have a shallow tunnel, especially for water conditions and for avoiding high in-situ stresses and, that on the other hand, the tunnel should go thought continuous and reliable soil, which are mainly the deepest types of soils. The choice has to be lead by making a comparison between the different options possible. For instance, if the water risks are high and that being above the water table is not possible, the tunnel should pass through the most permeable and resistant soil, even if it is deep. However, additional constrains, more technical, has to be taken into account to design the tunnel's path underground.

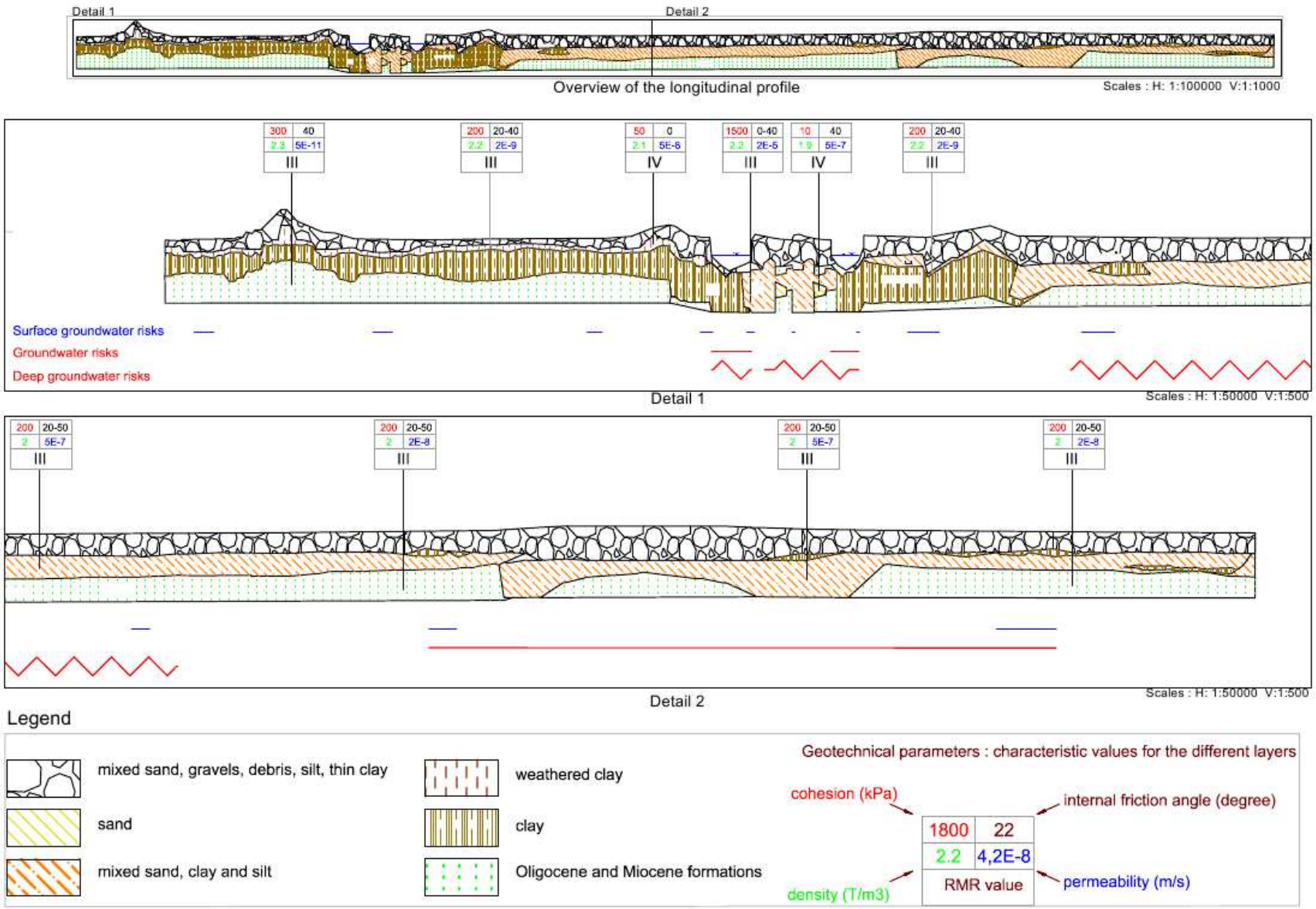

Figure 6: Longitudinal profile of the underground conditions

2.2.2. TECHNICAL CONSTRAINS

Several constrains, not directly related to geological underground conditions had to be taken into account. First of all, the vertical maximum slope of the tunnel is 1,2%., and the stations should be as much as possible, horizontal.

Secondly, the existing underground installations should be included in the choice of the path. Deep underground can be found metro lines. In shallow zones, especially when there are a lot of facilities above the ground, there can be metro lines, parking lots, and archeological constructions, which are current in cities like Budapest existing since long.

Furthermore, facilities above the ground should be destroyed as less as possible. Thus, the metro line should be constructed as much as possible without disturbing above the ground life and facilities. For instance, a cut and cover tunnel is not possible.

Finally, the construction of the stations and other links from the surface to the tunnel (ventilation shafts, supply sites) should be taken into account. The more the tunnel is deep, the more the accessibility is difficult and/or expensive. So the tunnel should be made as shallowest as possible, but taking in priority into account the other recommendations regarding the choice of an underground path.

Thus, regarding technical constrains, it can be deducted that:

- The tunnel cannot vary its deepness a lot
- The tunnel should not be to shallow. Indeed, if cut and cover is limited, excavating from underground in gravels and sand is risky concerning settlement if no important ground support is set. Furthermore, by being shallow there are many risks to find unexpected existing facilities.

2.2.3. LONGITUDINAL PROFILE CHOSEN

Taking into account all the geological and technical considerations deducted above, the underground profile can be drawn.

In order to choose between the different alignments, we first made a draft of the underground paths for each alignment, as mentioned in Section 1.1. Those paths were done in a sketchy way, without paying too much attention to the positions of the geological features; indeed, the geological profile was going to follow the tunnel profile chosen by us. But the aim of making draft paths was to compare between the alignments and to evaluate the major risks and characteristics implied. Thus, we had only to determine the properties that reflected the answer of the draft tunnel profiles to the recommendations mentioned before:

- The average deepness of the tunnel
- The slopes used
- The type and quality of rock crossed
- The ability to avoid consequences of water related risks
- The variability of the layer crossed

Therefore, not a high level of accuracy was needed for this section.

Then, once the final alignment was chosen, a detailed underground path had to be drawn for this alignment. This final underground path, that will be used for the project is shown in Figure 7, together with the geological conditions, the water risks zones, and existing underground facilities

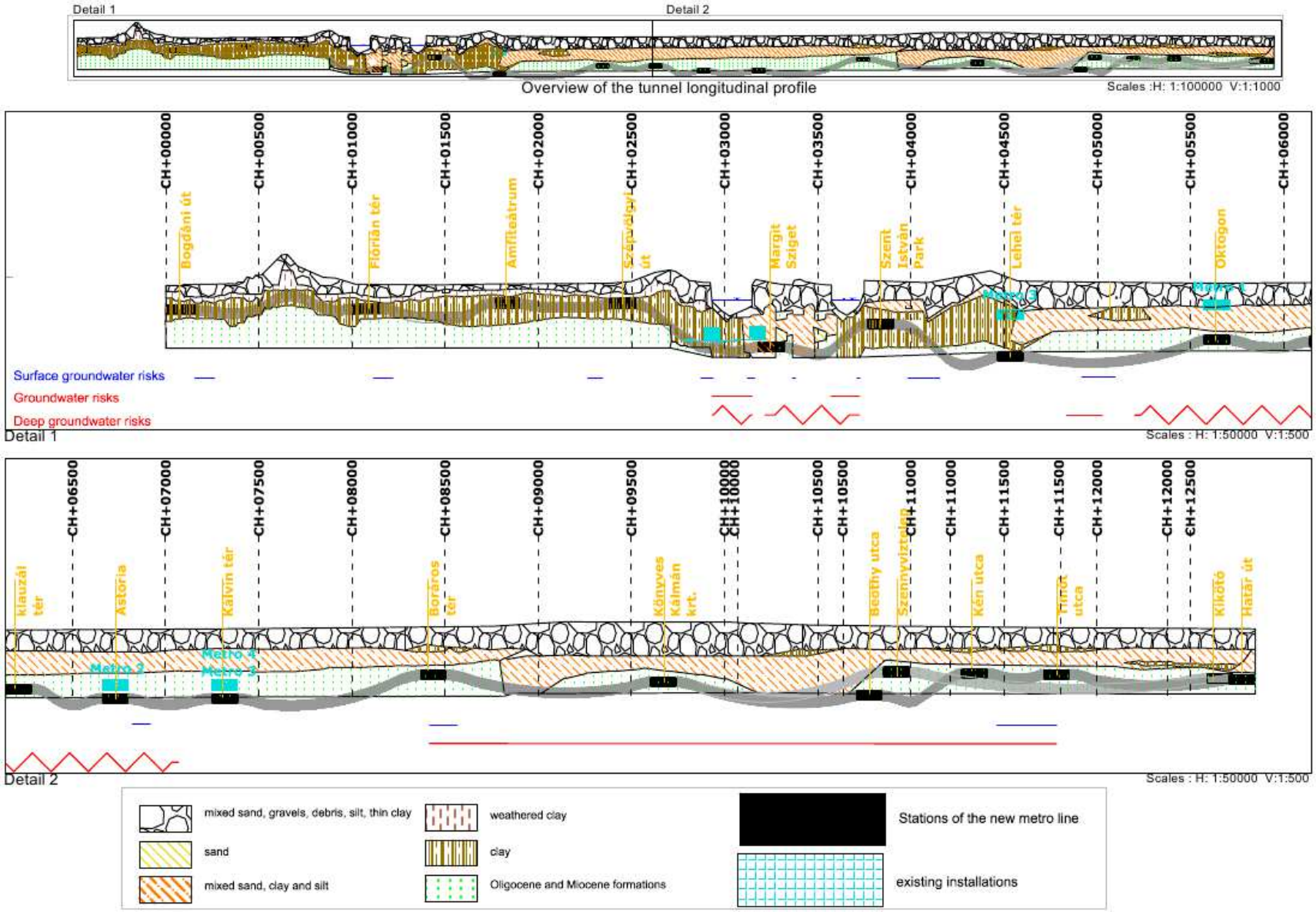

Figure 7: Final Longitudinal profile of the tunnel

The tunnel never crosses the upper layer of soil, which is composed only of mixed sand and gravels. In this way, we were able to minimize settlement risks and the risks to encounter unknown underground installations.

In the northern part of the line, on the right bank of the Danube River, the metro line stays in clay, at a shallow depth. Indeed, the clay provides good strength (200 kPa) and good permeability ($k<10^{-8}$) that can help to resist both the overburden and hydrostatic pressure; in this case, they will be low because of the shallow depth. The clay allows also less settlement than gravels and sand, and there is no need to go deeper in the Oligocene and Miocene formations that will most probably show roughly the same properties.

Then the tunnel follow a 1,2% slope in order to stay as much as possible at shallow depth and then to go under the Danube river and under the existing installation. This slope will have to be taken into account during the construction, according to the excavation method used in this part. In fact, water will come down into the tunnel. Furthermore, along the slope there are some layer changes, but it is between clay and Oligocene and Miocene formations that have similar properties. So the risks induced are low.

We decided to pass just under the existing installations that are under the Danube River. Indeed, the space between the bottom of the river and the existing installations is less than 5.5m high. There could have been high risks of water inflow and swelling. However, we did not wanted the tunnel to be too deep. That would have increased the hydrostatic pressure. So we decided to pass just under the installations. Measures will have to be taken to avoid settlements or any damage to the existing structures. The minimum distance between the tunnel and the installation is thus 1m. The ground surrounding the installation will have to be prepared, and some concrete works will have to be done from the existing installation just after the excavation of the tunnel is done in this zone.

Under the Danube River, where hydrostatic pressure and risks linked to deep water are high, the tunnel has to pass through different type of soil. We tried first to minimize the number of changing layers. But on the whole, the strength of the soil is in this part exceptionally good (c>2MPa) and the permeability is low ($k<10^{-8}$). However, the soil is in this part highly fracturing, so that sudden water inflow and swelling can be possible. Furthermore, the soil is in some zones weathered, with some sand parts. Thus the permeability can suddenly increase, while a drop in strength can be observed. Special care in the excavation of this part will have to be taken.

After the Danube, there is no more good clay. We had the choice either to go through mixed soil composed of thin clay, sand, silts, weathered clay, or to go through Oligocene and Miocene formations. Both of these layers are under the water table. The Oligocene and Miocene formations layer is the deepest, but provides a homogeneous soil with good properties. As there are all along the tunnel water risks, we should not take the risk to be in unreliable ground, with sudden change in the permeability, strength and fracturing, that could provoke swelling or high constrains on the tunnel. Thus, we have chosen in the South part in the Oligocene and Miocene formations. They are deep, but they provide good strength and good permeability.

However, just after the Danube River, there is still some good clay at a shallow depth. In order to minimize the depth of the tunnel, we decided to create two big slopes in order to reach the clay at a shallow depth, even if we have to go down after, instead of staying deep in the Oligocene and Miocene formations. That implies two changes in the layer crossed, but those changes would have existed even if staying at the same level. Furthermore, as the change in layers before the Danube the changes do not imply huge risks, since clay and Oligocene/Miocene formations are very close in their properties.

Moreover, it can be noticed that in the southern part of the line, the tunnel is crossing some weathered and mixed soil, as well some sections that may present water risks. As those crossings couldn't be avoided, we managed to make the tunnel go through them in the shortest way in order to minimize the risks mentioned above.

Finally, the tunnel has to cross the existing metro lines 3 and 4 that are at almost the same level. We chose to pass under it because passing above would have meant to have the tunnel both in Oligocene/Miocene formations and in mixed ground, as well as groundwater risks. As our metro line is crossing metro lines 3 and 4 at stations, we decided to make the stations of our metro line just below the ones of metro lines 3 and 4. There will be 2 meters between the tunnel and the existing metro stations; there are thus risks of settlement and of damaging the existing installations. Those stations will have to be prepared in advance before the excavation of the tunnel, and some concrete works will have to be done after the excavation.

3. CONSTRUCTION: EXCAVATION METHOD AND PLANNING

The alignment and the longitudinal profile has been chosen in order

1. To fit the social demand
2. To minimize geological risks
3. To minimize construction cost and time
4. To comply with technical specifications

In this section, we will expose how the tunnel will be excavated and the approximate time it will take to do it. In order to know this construction time, tunnel features, excavation methods used and management of the risks have to be known.

3.1. EXCAVATION METHOD CHOICES

The metro line is not composed only of tunnels. Underground stations and the connection from the surface to it have to be built, but also ventilation shafts, crossover and cross-passages. Furthermore, during the construction, supply site should be built to provide access to the tunnels.

As the main excavation to be carried out is the excavation of the tunnels, we should first decide what method of excavation for the tunnels should be used. Then, considering this method, the way to excavate the over features of the tunnel will be chosen.

3.1.1. TUNNELS EXCAVATION

As the construction has to be done quickly, with low impacts on the above the ground life (no noise or vibration), the only feasible method of excavation will be to use a TBM. As the ground is mostly composed of soil, a shield TBM will be used, as it can be inferred from the Figure 8.

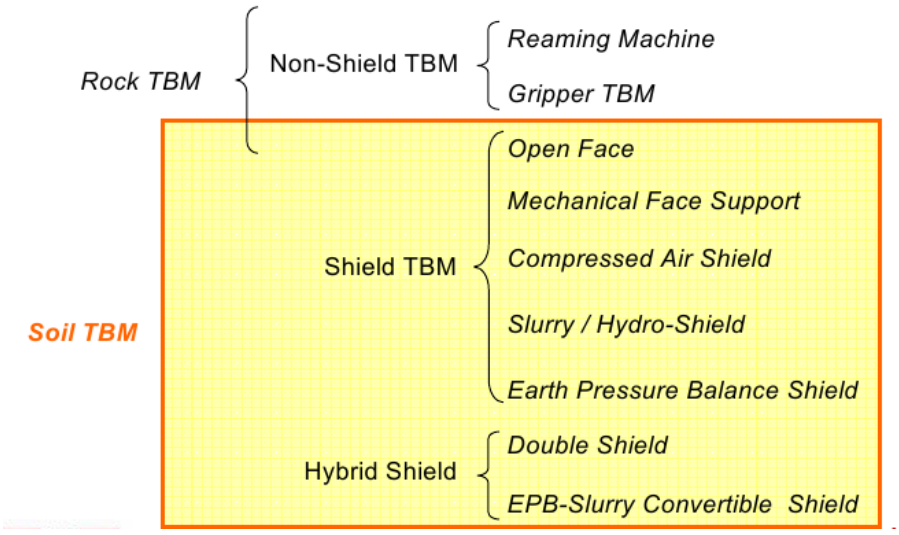

Figure 8 : TBM used according to the type of ground excavated

As seen in the Section 1.2, the tunnel goes principally through clay and Oligocene/Miocene formations. However, it can pass through mixed soil with thin clay, sand and silts, with varying properties. Furthermore, there are in several zones water inflow risks. Thus the TBM should provide mechanical peripheral and face support. The TBM indicated for clay soils is an Earth Pressure Balance Machine (EPBM), as shown in Figure 9.

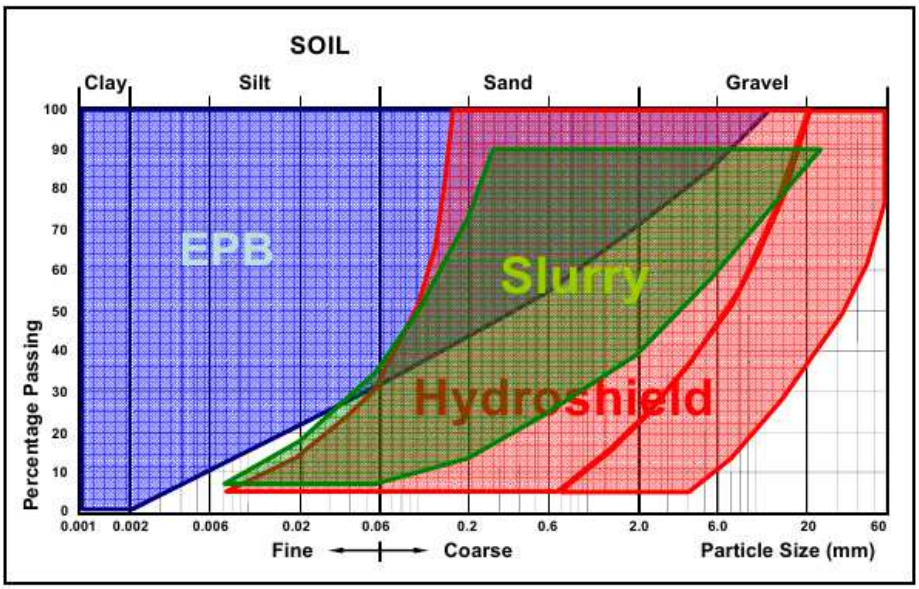

Figure 9: choice of a shield TBM according to the type of soil crossed

This choice of excavation method provides also good answers to the geological risks that are encountered along the tunnel underground path.

First of all, the EPBM can adapt to a varying soils. If the strength properties or permeability change, the EPBM can adapt the pressure to make the front stable, despite changing in the ability of the soil to resist to water and ground pressure and to be submitted to water inflow. Indeed, it can adapt also to variations in the composition of the soil, water and fines content for instance, even though there should be a minimum of fines to make the earth-based slurry. According to the soil composition, air, foams or additives can be added to the slurry, depending on the pressure needed to support the face. However, sudden changes in the soil permeability, strength and/or composition should be foreseen in order to make the necessary changes in the slurry and pressure.

EPBMs are well adapted to conditions that present groundwater risks. First, variable hydrostatic pressure is managed by the pressure applied by the shield, and if there are water inflows, air can be used in the shield to resist to it. Moreover, as mentioned before, a variation in soil water content can be managed by adapting the slurry. Finally, the EPBM, like the over soil TBM set up directly the final lining, which contains already a waterproof membrane.

The fact to install directly the lining after the excavation is also very interesting regarding settlement matters that are thus avoided, since a support is directly provided.

However, TBMs sections can only be circular and are not flexible. Then, the tunnels will have to be circular. The tracks can be either put together in the same tunnel, or they can be put separately in two different circular tunnels. If only one tunnel is used, it should be more than 10m diameter. If 2 tunnels are built, they will be 6m diameter each. On one hand, the construction of only one tunnel implies more compressive strength on the lining, particularly because we are excavating in soil that cannot provide enough strength itself. On the other hand, building 2 tunnels need more excavation, but it is less risky, both for geological reasons and security inside the tunnel (if there is fire in one tunnel, the other one can be saved). Thus, we decided to separate the tracks in 2 different tunnels, as shown in the Figure 10. The inner diameter has to be 5.2m at least for technical matters. Then, the final lining (30cm) and the extra space excavated by the TBM (10cm) have to be taken into account to define the outer diameter, which will be 6m. Then, the space between the two tunnels should be

between 1 times to 1,5 times the diameter of one tunnel in order to provide enough confinement for both tunnels. However, a balance is needed as the tunnels should be as close as possible to reduce the length of crossovers and cross-passages and the width of stations. So finally, we arrive at the final diameter of 7m.

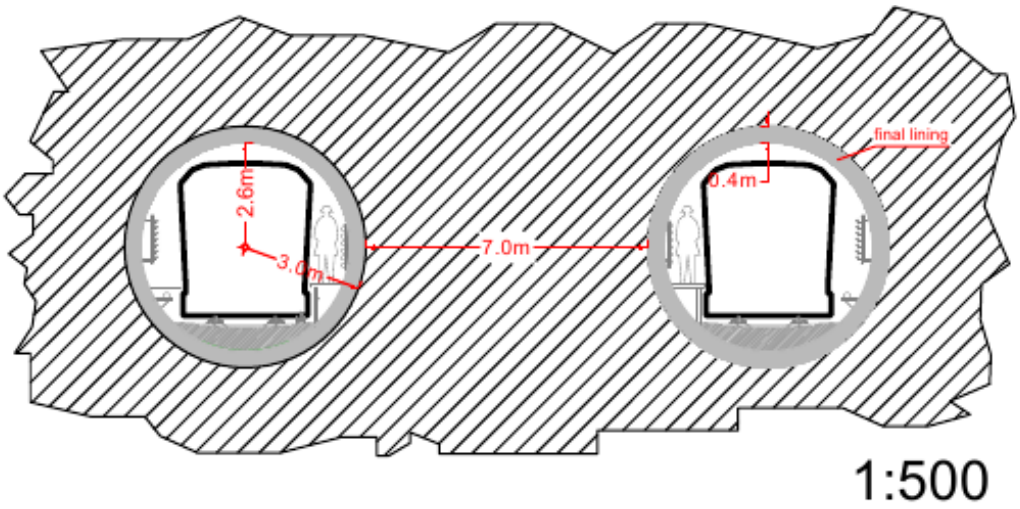

Figure 10: cross section of the metro line

3.1.2. Supply site excavation

The supply site should provide accesses to the tunnels. Those accesses should be large enough to:

- Allow trucks to move to remove the materials
- Mount and/or Dismount the TBMs

They should also, as much as possible provide direct access to the tunnel. Thus, only cut and cover can be used, even thought the tunnel is deep. The configuration of the access should be the one shown in Figure 11. The TBM can be put dismounted at the bottom by a crane, and can be then mount and start to excavate the tunnels.

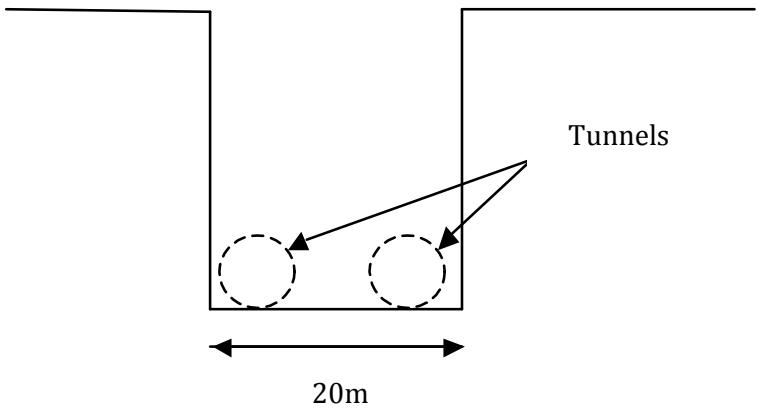

Figure 11 : Configuration of a supply site

3.1.3. Station excavation

The excavation of the stations is composed of the excavation of the underground stations and of the excavation of the access from the surface. There are 2 excavation options. Either the station and its access from the surface are excavated by cut and cover from the surface, either the station is excavated from underground and a shaft is build to access the stations and to install the necessary facilities (stairs, escalators, elevators…)

The choice between the two options depends on:

- the depth of the station
- the surface place, since we want to avoid disturbing urban life
- constructive and technical matters during construction

Generally speaking, a cut and cover station is less expensive than using a shaft if the depth of the station does not exceed 15m-20m.

Cut and Cover stations

The three end stations, Bogdáni út, Kikötó and Határ út are not supply sites, but they will be used for the exit of the TBMs. So cut and cover is needed for those stations. That is not a problem, because as those stations are at the metro extremities, they are not in dense urban areas.

The station Lehel tér corresponds to a supply site. Thus, the cut and cover that will be done for the excavation of the supply site will be used also to build the station.

The cut and cover stations will have the configuration shown in Figure 12, Figure 13 and Figure 14. The access to the surface is built in the cut and cover area. However, as the cut and cover dimensions are not those of the underground stations, supplementary excavation will have to be done. This excavation will be done by conventional mechanized excavation.

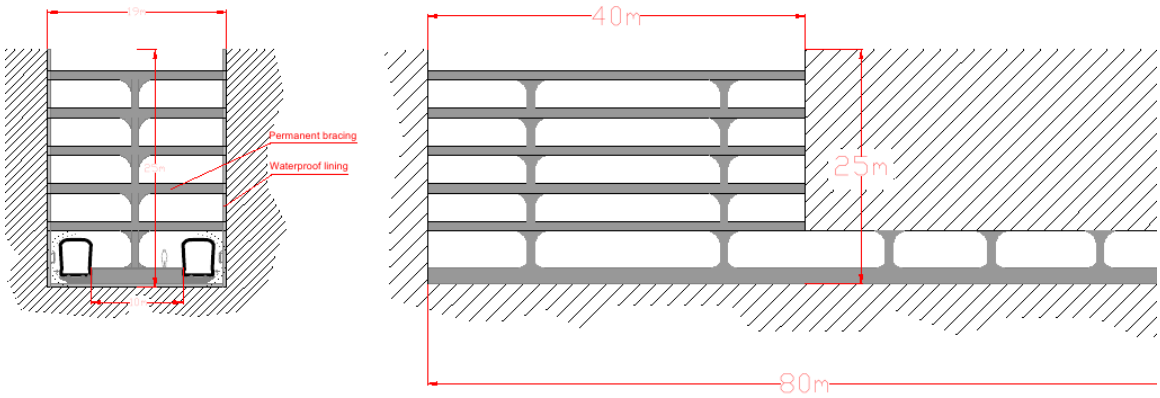

Figure 12 : General layout of a Cut and Cover Station (here, Kikötó station)

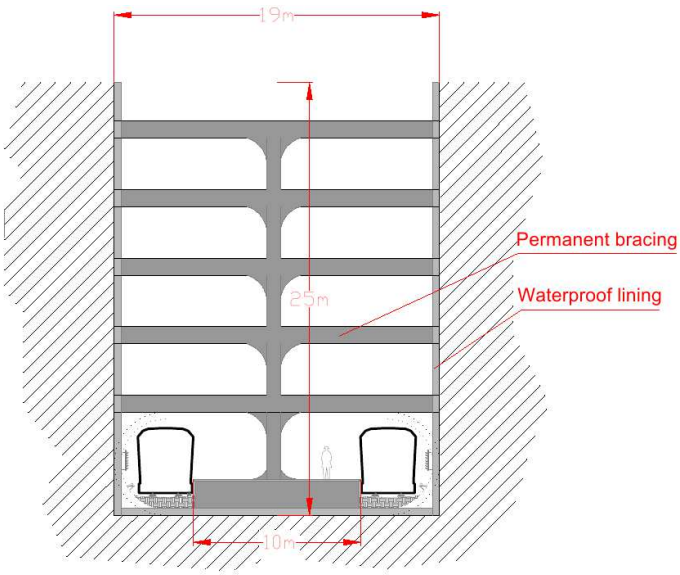

Figure 13: Transversal profile of a cut and cover station (Kikötó station)

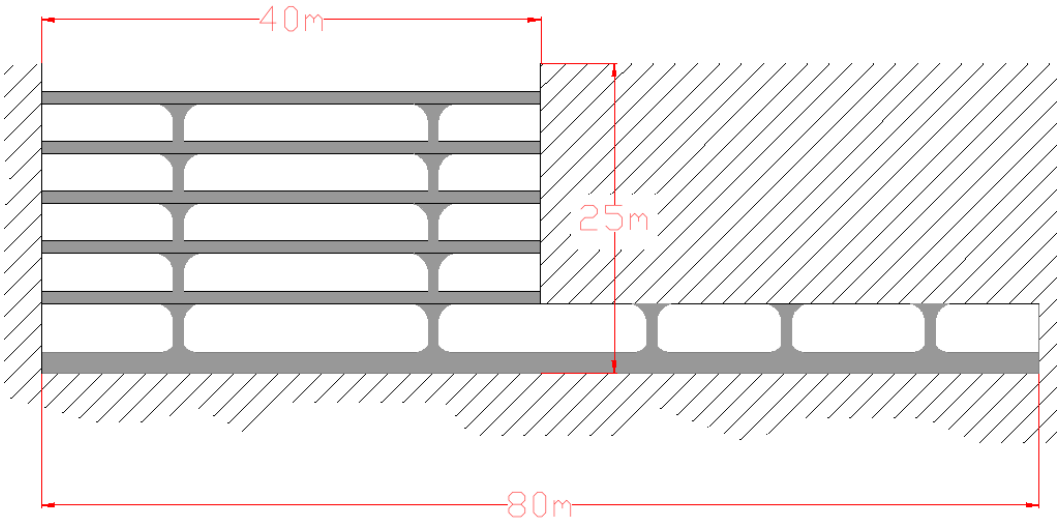

Figure 14 : Longitudinal profile of a cut and cover station (Kikötó station)

Shaft Stations

Three stations, Flórián tér, Amfiteàtrum and Szépvölgyi út, on the right bank of the Danube River, are at less than 15m deep. However, on the surface of each one, there is either a park or archeological features or dense urban constructions. As we want to avoid any disturbance to the urban life or impact on cultural matters, we decided to build those stations with shafts, even if it is more expensive than using cut and cover. The rest of stations in the line are located deeper than 20m and in cohesive soils so shafts will be used to excavate them.

However, it can be noted that two stations, Astoria and Kálvin tér will be built from underground but won't need any shafts. Indeed, metro lines 2, 3 and 4 already have stations there. So, as it was foreseen in the longitudinal profile, the new stations will be built just near to the existing ones, and only an access to the other existing stations will be built. The general access from the surface to the stations will be provided by the existing facilities.

The general layout of underground stations with shaft is given in Figure 15, Figure 16, and Figure 17. The shaft should be built according to which facility we want to put inside. The shafts used for the project are roughly 3m to 5m diameter and 15 to 39m depth. The underground station and the shafts will be excavated by conventional mechanized excavation. Indeed, drilling and blasting is not suitable in urban conditions, because it can cause damages to structures, noise and vibrations. Furthermore, the soil is here suitable for mechanized excavation since the cohesion of the soil is always less than 5MPa.

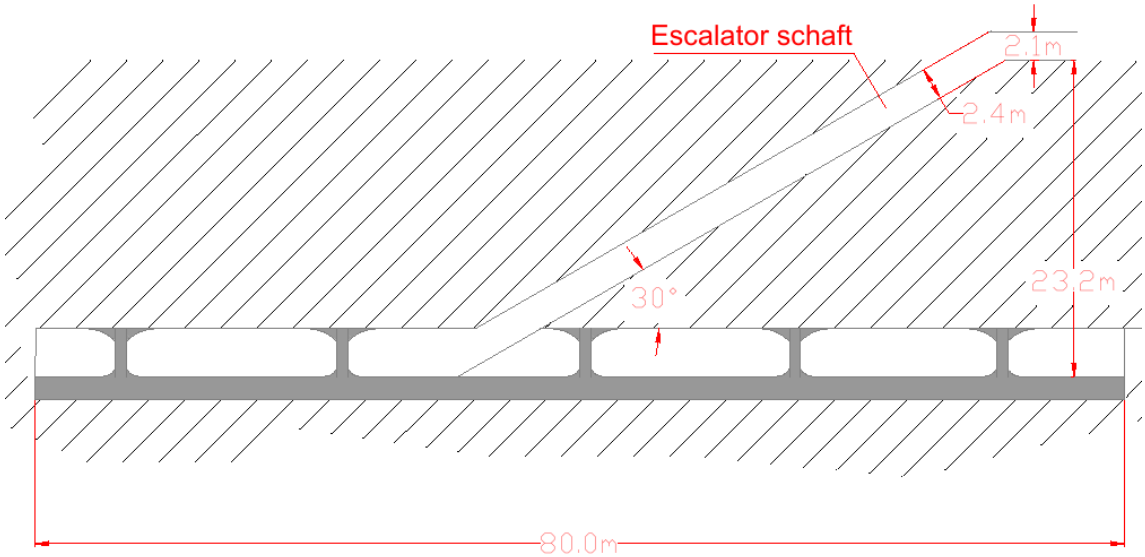

Figure 15: Longitudinal profile of a station with shaft

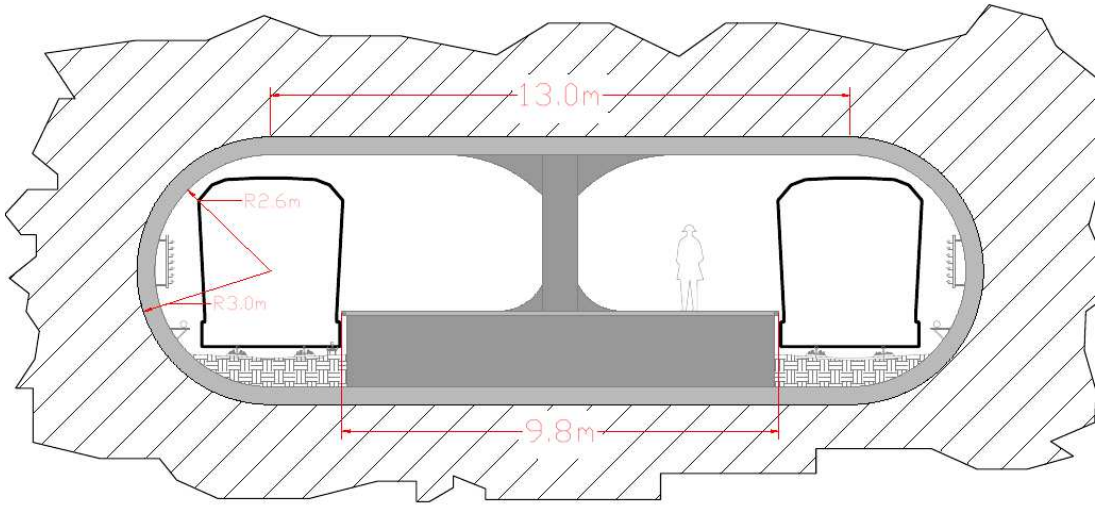

Figure 16: Transversal profile of a station with shaft

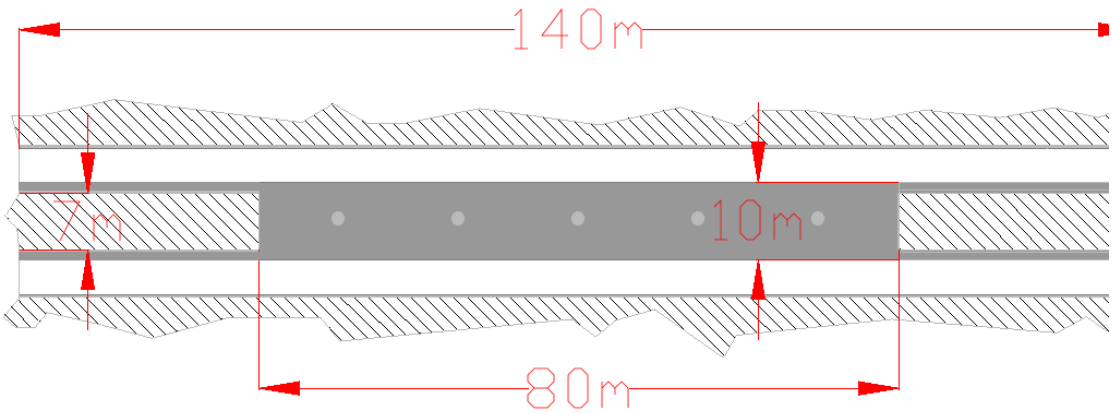

Figure 17 : Plan of a station with shaft

It has to be taken into account that the construction of the underground stations with shaft should be done in several steps. Indeed, the TBM is first excavating the 2 tunnels serving the stations, and a lining is directly set up. So:

- The excavation of the underground station can cannot start before the TBM has been removed from the corresponding section of the tunnel excavated
- The lining, necessary to push the TBM, but also helpful regarding stability and water management, has to be partially removed to link the 2 tunnels. That is why we decided to excavate only 80m of the station out of the 140m in order to minimize the works to carry out. Furthermore, we decided to put special lining where the lining will have to be removed. This lining will be less resistant that the normal one, which is in fact the final lining.
- Once the necessary lining has been removed, the excavation of the platform zone can start. This will be done by conventional mechanized excavation.

Then, the shaft has to be connected to the underground station. Either the shaft can be done before the end of the excavation of the underground station, or it can be completed after. Both of the methods have their risks. We choose to make the shaft before the end of the excavation of the underground station, because it allows to make the facilities directly when the underground station is finished, and not to wait for the shaft to be excavated.

3.1.4. CROSS PASSAGES AND CROSSOVER EXCAVATION

The crossover and cross passage geometry and dimensions are shown in Figure 18 and Figure 19.

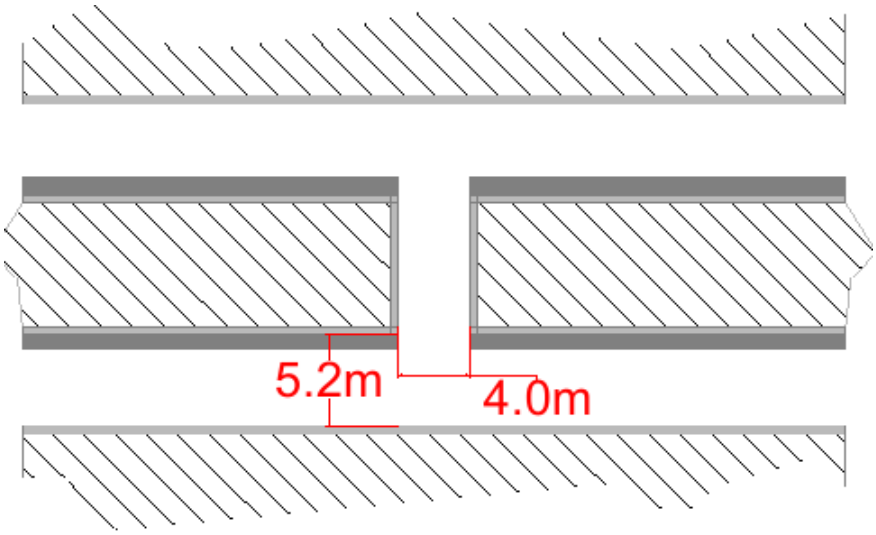

Figure 18 : Cross Passage

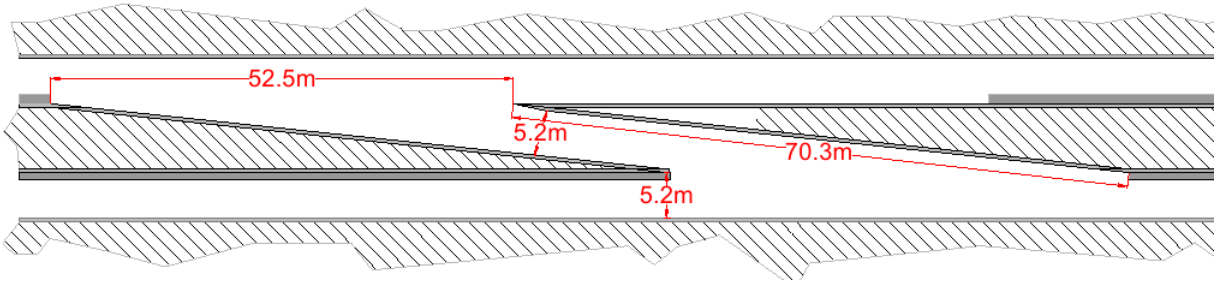

Figure 19: Cross Over

As underlined above, the TBMs have not a flexible shape. Furthermore, as they have a shield of roughly 10m long, they cannot turn in high radius curves. Thus, nor crossovers, not cross-passages can be excavated by the TBM used for the tunnel.

Thus, they will be excavated by conventional mechanized excavation. As for the excavation of the station, it has to be taken into account that the TBM will pass before the excavation of the cross passages and crossovers. So some parts of the segmental ling set up by the TBM will have to be removed before the excavation. Thus, special lining, less resistant and easy to destruct will be also used when it will have to be removed. Furthermore, the excavations won't be allowed to start before the TBM completed the tunnel section excavation.

3.1.5. VENTILATION INSTALLATION EXCAVATION

Ventilation installations have to be set up at maximum each 1km. Thus, as the stations can also provide ventilation installation, 6 ventilation shafts should be built. Those shafts are vertical and are 4.5m diameter and 20m to 35m depth. Those shafts will be excavated also by conventional mechanized excavation.

3.2. NECESSARY GROUND IMPROVEMENT, WATER MANAGEMENT AND SUPPORTS

As exposed in the part 1.2, there are several risks to manage in order to build the metro line without any problem such as settlement, swelling or collapse. To limit the risks that some problem occur during the excavation and during the life cycle of the tunnel, some action have to be taken for the construction.

Temporary action, such as temporary support will have to be done during the excavation period in order to avoid any problem before the setting up of the final lining. This final lining will have to provide a protection of the tunnel against risks during the whole lifecycle of the tunnel. The temporary and permanent action should provide protection against:

- Ground instabilities
- Earth and water pressure
- Water related problems such as swelling, huge inflow and deterioration of the construction.

3.2.1. TEMPORARY ACTIONS

The temporary actions are taken to avoid problems during the period between the start of the excavation of a section and the completion of the final lining of this section. This period of time is more or less long according to the excavation method and to the shape of what is excavated. Furthermore, the risk that some problem occurs depends at the same time on the underground condition, on the excavation method and on the shape of the element to excavate.

For the project, 3 excavation methods are used: Tunneling with EPBM, Conventional mechanized excavation and Cut and Cover. The EPBM is only excavating the main tunnels. Conventional excavation is used for building underground stations, cross passages and crossovers, and shafts.

EPBM tunneling

As discussed in Section3.1, by tunneling with EPBM most of the major risks are reduced. However, the reduction of those risks need special observations and action in mixed and changing soils to update the slurry composition to be able to balance pressure and to manage water in front of the shield.

At each moment before the setting up of final lining, the excavated soil is supported, either by the shield or by the tail. If there is a risk of groundwater, no infiltration of water can occur in the tunnel.

In fact, the gap between the tail skin and the final lining (where there are risks of water entrance) is blocked by a wire brush. Then there is contact between water and lining due to the backfilling. Those principles are illustrated in Figure 20. Therefore, there will be no need to have supplementary support for water management. However, when crossing water risky zones, the advancement should be lower than in good conditions. Indeed, the backfill should have the time to settle not to be washed out if there are swelling or huge water inflow. The backfill that will have to be used should be a fast settling one, providing quickly a high strength. That is why a two-component backfill should be used, and not a classical one. Besides, in those conditions the slurry has to be well adapted to the ground conditions, something that takes time.

However, there will be special works to do before the passage of the TBM near to the existing installations (see 2.2). Indeed, the TBM is passing at roughly 2m under those installations. From those installations, grouting works should be carried out. However, in order not to make to hard the soil in which the TBM will excavate, packers and low pressure should be used in order to avoid the grout to fall down in the zone to be excavated by the TBM. If there is any problem of strengthening too much the soil, the advance rate of the EPBM will decrease, since the abrasiveness of the grout is high.

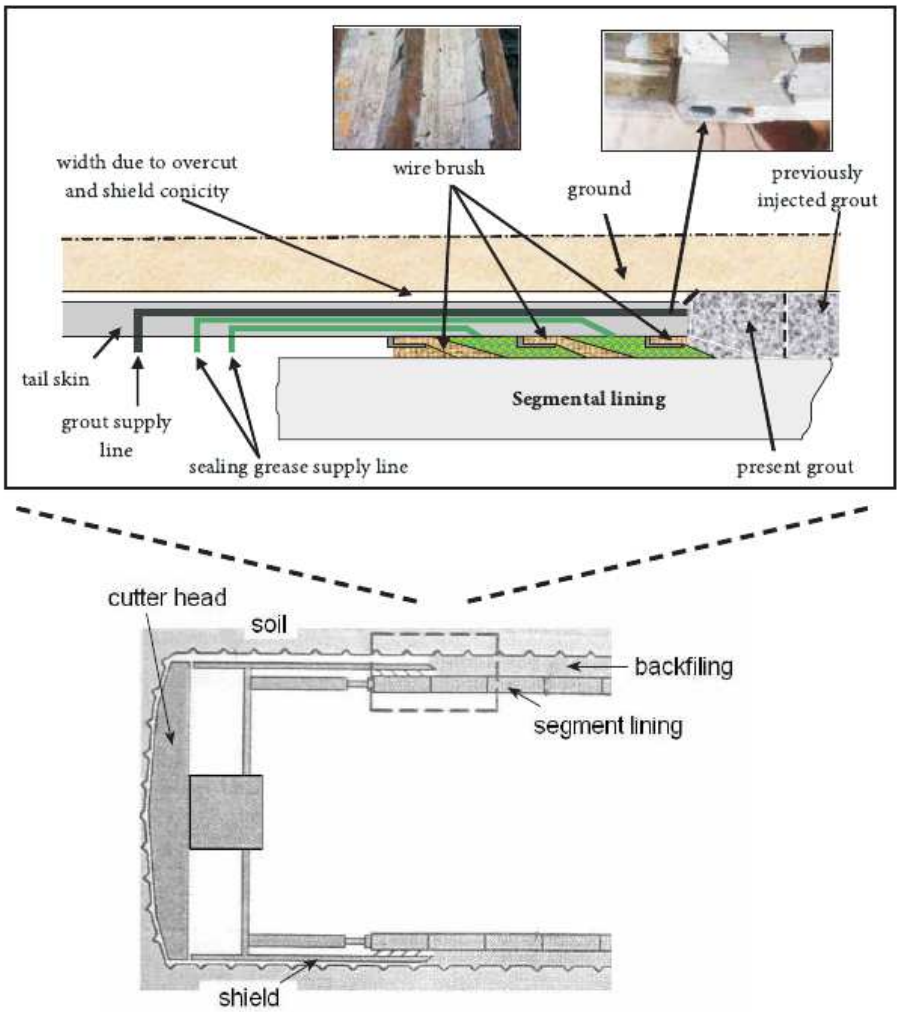

Figure 20 : temporary support and water management provided by a shield TBM.

Conventional mechanized excavation underground

Underground excavation concerns the construction of the underground stations, of the crossovers and of the cross passages.

Depending on the zone in which the excavation will be done, different kind of temporary support and ground improvement have to be set up. The nature of the works to carry out will depend on:

- The depth of the excavation
- The properties of the soil in which the excavation is done: permeability, fracture, strength
- The risk to find groundwater

Indeed, on those soil features depend the occurrence of problems such as settlement, swelling or instabilities is different and the solutions that can handle the risks (for instance, grouting is not proper for low permeable soils)

The tunnel crossesseveral types of zones, which are presented in the Table 4. The "Ground mechanical properties" column takes into account the strength of the soil and its consistency. The RMR reveal, along with the RQD, the discontinuities and joint characteristics and the groundwater conditions.

Zone type	Depth [m]	Distance under the water table [m]	Risk to find ground water	Permeability [m/s]	Ground mechanical properties[1]	RMR
1	<15	<10	No	$<10^{-8}$	R5b	III
2	20-30	10-20	No	$<10^{-6}$	R5b	III
3	20-30	10-20	Yes	$<10^{-6}$	R5b	III
4	<30	<20	Yes	$<10^{-6}$	R6a	IV
5	<30	<20	No	10^{-8}	R5b	III
6	<30	<20	Yes	10^{-8}	R5b	III

Table 4 : classification of soil zones for designing the temporary supports and ground improvements

Depending on the type of soil in which the excavation has to be carried out, specific temporary actions should be done. Those actions are listed in Table 5according to the type of soil.

Zone type	Temporary supports, ground improvement and water management needed for the conventional excavation
1	- Rock bolts 4m long with a 1,5m spacing - Shotcrete with wire mesh 100mm - The support have to be completed 10m at maximum from the front
2	- Rock bolts 4m long with a 1,5m spacing - Shotcrete with wire mesh 100mm - The support have to be completed 10m at maximum from the front
3	- Grouting with fore pooling - Rock bolts 3m long with a 2m spacing - Shotcrete with wire mesh 50mm - The support have to be completed 10m at maximum from the front
4	- Grouting with forepoling - Rock bolts 4m long with a 1,5m spacing - Shotcrete with wire mesh 100mm - The support have to be completed 10m at maximum from the front
5	- Rock bolts 4,5m long with a 1m spacing - Shotcrete with wire mesh 150mm - The support have to be completed 10m at maximum from the front
6	-Grouting with forepoling - Rock bolts 4m long with a 2m spacing - Shotcrete with wire mesh 100mm - The support have to be completed 10m at maximum from the front

Table 5 : temporary support and ground improvement to be done according the type of soil excavated

For zone type 1, the temporary support is relatively important in comparison to the soil features. The temporary supports are indeed the same as for zone type 2, which is deeper. However, we are at shallow depth, and we want to avoid any settlement. As the RSR (Rock Structure Rating) of the soil is less than 20, so the spacing between bolts recommended is 1,5m.

[1]From AFTES, Working Group 7, Temporary And Permanent support

Then, systematically, when deep under the water level, forepoling is made even if the permeability is low, as we want to avoid any swelling of the soil. Furthermore, the ground improvement provides a better resistance to the water pressure. But, as the quality of the rock is increased by this forepoling, less temporary support are needed than for the same type of soil without groundwater risks.

Special works should be done for the stations that are just below the stations of the metro lines 3 and 4. For those stations, and before excavation, forepoling will be done in order to avoid any settlement and damage to the existing metro lines. Given the conditions, steel ribs (not bolts) will be used, since there is not enough space between the stations to put 4m long bolts.

Cut and Cover and Shaft Excavation

The principal risk when excavating from the surface is to have settlements and soil moves. That is critical in urban area. According to the depth of the excavation, the number and the quality of soil layers vary, and the water level can be passed out. However, some risks to have surface water exist.

All the shafts and all the cut and covers, except one, will be used during the cycle life of the tunnel. For them, the final lining and bracing (for the cut and cover stations) should be set as soon as possible, when the excavation advance allows it.

For all shafts and cut and covers, sheet pile will be used. To avoid any movement of the soil or settlement, temporary bracing is used when digging in gravels. Then, when reaching more resistant soil, bolts are used. More efficient supports will have to be provided for the temporary supply site, since no final lining and bracing will be set up. For this, tensioned tendons can be used.

For the protection against water and swelling, a choice of suitable sheet piles should be done. Impermeable ones exist and should be used when reaching the water level.

3.2.2. PERMANENT ACTIONS

Permanent actions concerns extra support for water management. The support is provided by a final lining, with the water management system either an umbrella solution or a submarine solution.

The EPBM provides the setting up of a segmental concrete lining with a waterproof membrane inside. Thus, it provides a submarine solution against water inflows. However, the nature and the position of the radial and longitudinal joints should be well established to avoid any water inflows trough them. Especially, the radial joints should not be aligned. That is why a rotation of the segments is needed every time the EPBM moves forward. Moreover, the segments should be designed with a key block segment, which provides the pressure to close the joints. For that reason, the key block is trapezoidal. The layout of this final lining is shown in Figure 21 and Figure 22.

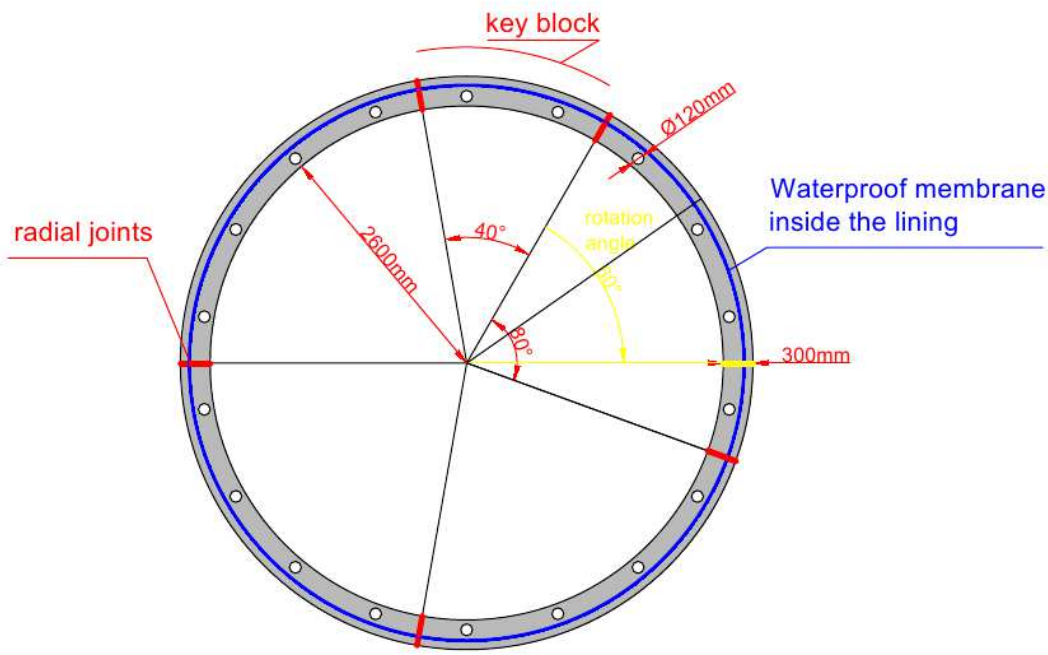

Figure 21 : Segmental lining section

Furthermore, as mentioned in 3.1.1, there is a backfilling to carry out in order to fill the gap between the section of the lining and the excavated section. This backfill is providing both strength against hydrostatic pressure induced by the submarine solution and a first protection against water inflows.

In order to resist the hydro-static pressure the lining should have a minimum thickness of 30cm. c30/37 concrete can be used since the segment are pre-casted outside the tunnel, so that the temperature provoked by high cement-content concrete during the casting of the concrete is not a problem. As the tunnel as a circular cross-section, the concrete does not need to be reinforced, since it works only in compression.

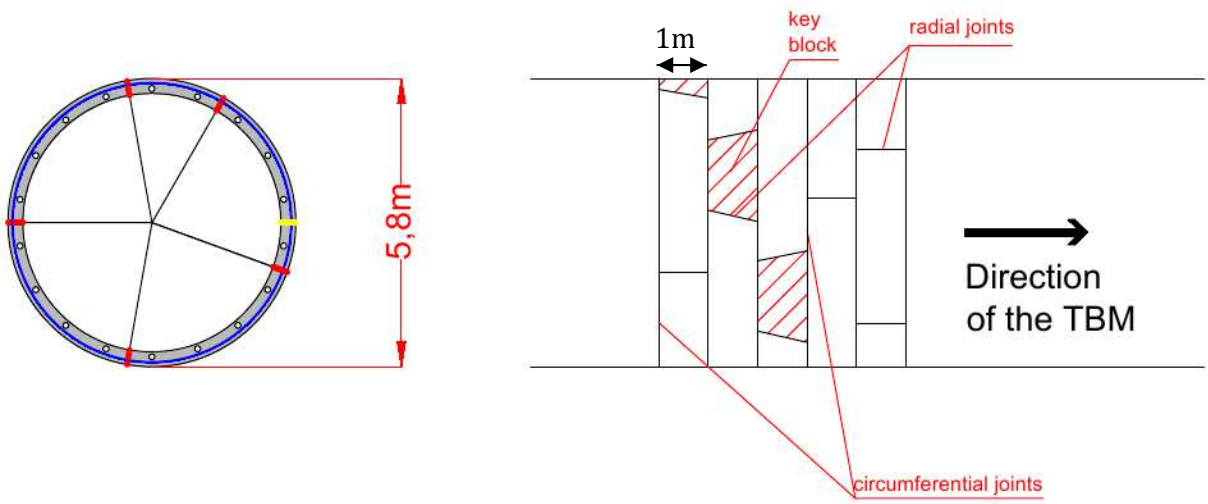

Figure 22: Segmental ling section and profile

As mentioned in Section 3.1, some parts of the lining will have to be less resistant. A lining using a lower cement ratio may be possibly used.

Indeed, for the excavation of underground installations, the lining of the built tunnel will have to be removed. For those underground installations, it seems important to keep the same system of water management as the tunnel, in order not to provoke discontinuities in constrains.

Thus, we could apply a membrane similar to that shown in Figure 23in the sections of the underground stations, cross passages and cross over that have no angle and that are linear. Then, when there are detailed shapes with angles for instance, a sprayed membrane, like the one shown in Figure 24will be used. Such membrane will be also sprayed in order to link the waterproof membrane of the tunnel lining and the waterproof system of the underground installations. Of course, special care will have to be taken concerning the surface on which the membranes will be applied.

Once the membranes have been applied, concrete lining will be casted underground. That will also provide good bonds with the segmental lining of the tunnels. Thus, the final lining will be in c20/25 in order to avoid high temperature of concrete. The thickness will be 30 cm for the cross passages and the crossovers where the section is circular. Otherwise, in stations, which do not have circular section, the concrete will have to be reinforced.

Figure 23 : AlpTransit/NEAT-Gotthard-section Bodio/ Switzerland, year 2007, 16.5 km

Figure 24 : Sprayed Membrane

Given the span of the stations (20m) and the weakness of the soil, concrete pillars will have to be set up, only lining won't be enough to support all the pressure.

Then, for shafts and cut and cover stations, the same principles of water management and permanent support will be applied. An example of a waterproof membrane set in a shaft is shown in Figure 25

Figure 25: NBS Frankfurt – Köln/Germany Emergency exit shaft with Sikaplan® WT 2200-31HL2 and Waterstop MP AFI 600/35

3.3. EXCAVATION PLANNING

3.3.1. EXCAVATION TIMES FOR THE DIFFERENT ELEMENTS OF THE METRO LINE

The different elements to excavate are the following ones:

- The 2 supply sites
- The exit sites, which are the 3 end stations
- The tunnels
- The 13 station shafts
- The 6 ventilation shafts
- The 15 underground stations
- The 30 cross passages
- The 2 crossovers

Generally speaking, the time needed for each type of excavation depend on

- The length to excavate (for the tunnels, underground stations, crossovers and cross passages) or on the deep to excavate (for shafts and cut and cover)
- The method used (conventional tunneling or EPBM tunneling)
- The ground improvement to do
- The permanent water management and lining to set up

Extra time should be given is the ground conditions are risky, since it may provoke some delays.

For tunneling with EPBM, the advance rate is 40m/day in good conditions, and 10m/day in bad conditions. For our project, as seen before, the conditions for EPBM are always good, except in the zone under the Danube River, where there is high groundwater risks and sudden changes in the ground properties.

Conventional mechanized tunneling has an advance rate of 10m/day in good conditions. We will consider that we are always in good conditions, since the ground is soft and ground support and improvement is made to avoid any problem.

The setting up of temporary ground supports, the making of the ground improvement and then setting up of the final lining need extra-time, which is proportional to the quantity to do. Thus, if the lightest ground supports have to be done, it takes as much time as the excavation. If more support is needed, like forepoling, it will take 1.5 times more time than the excavation. For the setting up of the final lining we consider it would take as much time as the excavation one;

Table 6 and Table 7 summarize all the excavation time found taking into account what has been mentioned before.

		Excavation time [days]
Time per Supply site and exit site	Supply site 1 (Lehel tér)	**90**
	Supply site 2 (Szennyviztelep)	**75**
	Exit site 1 (Bogdáni út)	**60**
	Exit site 2 (Határ út)	**75**
	Exit site 3 (Kikötó)	**75**
Time per Ventilation shaft	Bogdáni út-Flórián tér	**60**
	Lehel tér-Oktogon	**105**
	Kálvin tér-Boráros tér	**75**
	Boráros tér-Könyves Kálmán krt.	**90**
	Szennyviztelep-Kikötó	**75**
Time per Station shaft	Bogdáni út	**No shaft**
	Flórián tér	**60**
	Amfiteàtrum	**60**
	Szépvölgyi út	**60**
	Margit Sziget	**120**
	Szent Istvàn Park	**75**
	Lehel tér	**105**
	Oktogon	**105**
	Klausál tér	**105**
	Astoria	**No shaft : using the existing ones**
	Kálvin tér	
	Boráros tér	**75**
	Könyves Kálmán krt.	**90**
	Beöthy utca	**90**
	Kén utca	**75**
	Timót utca	**75**
	Határ út	**No shaft**
	Szennyviztelep	**75**
	Kikötó	**No shaft**

Table 6 : Excavation time for supply sites, exit sites and shafts

Time to build the ventilation installations underground	Ventilation shaft between Bogdáni út-Flórián tér		15
	Ventilation shaft between Lehel tér-Oktogon		21
	Ventilation shaft between Kálvin tér-Boráros tér		15
	Ventilation shaft between Boráros tér-Könyves Kálmán krt.		21
	Szennyviztelep-Kikötó		21
Time to build the stations underground and to build the facilities	Bogdáni út		45
	Flórián tér		75
	Amfiteàtrum		60
	Szépvölgyi út		75
	Margit Sziget		120
	Szent Istvàn Park		75
	Lehel tér		45
	Oktogon		90
	Klausál tér		90
	Astoria		120
	Kálvin tér		120
	Boráros tér		75
	Könyves Kálmán krt.		60
	Beöthy utca		60
	Kén utca		75
	Timót utca		75
	Határ út		45
	Szennyviztelep		60
	Kikötó		45
Time per Cross overs	Cross over 1 (Lehel tér)		90
	Cross over 2 (Könyves Kálmán krt.)		60
Time per cross Cross passages	between Bogdáni út and Flórián tér	2 cross passages	7
	between Flórián tér and Amfiteàtrum	1 cross passages	7
	between Amfiteàtrum and Szépvölgyi út	1 cross passages	7
	between Szépvölgyi út and Margit Sziget	1 cross passages	12
	between Margit Sziget and Szent Istvàn Park	1 cross passages	12
	between Szent Istvàn Park and Lehel tér	1 cross passages	7
	between Lehel tér and Oktogon	2 cross passages	7
	between Oktogon and Klausál tér	1 cross passages	7
	between Klausál tér and Astoria	1 cross passages	7
	between Astoria and Kálvin tér	1 cross passages	7
	between Kálvin tér and Boráros tér	2 cross passages	7
	between Boráros tér and Könyves Kálmán krt.	3 cross passages	7
	between Könyves Kálmán krt. and Beöthy utca	2 cross passages	7
	between Beöthy utca and Kén utca	1 cross passages	7
	between Kén utca and Timót utca	0 cross passages	7
	between Timót utca and Határ út	2 cross passages	7
	between Határ út and Szennyviztelep	2 cross passages	7
	between Szennyviztelep and Kikötó	3 cross passages	7
	between Kikötó and Cross over 1 (Lehel tér)	3 cross passages	7

Table 7 : Excavation time for underground installations

3.3.2. EXCAVATION MANAGEMENT

Knowing all the construction times for the different component of the metro line, and after careful consideration of the different possibilities we had for the excavation of the Budapest metro tunnel, a final excavation scheme was obtained for the project. We tried to make the construction time the shortest by managing the team rotation, the starting of each step (where and when), and the number of TBM used, knowing that a TBM is economically efficient if it is used for more than 5km excavation.

Three EPBMs will be needed to complete the project in a little less than 1,200 days or 3.3 years. In our proposed excavation scheme, 2 TBMs will start tunneling from the *Szennyviztelep* supply site to the north and the third TBM going south into the most eastern of the tunnels. The two TBMs going to the north will have to dig approximately 10 km each until they reach the exit site 1 in Bogdániút station; they are identified as EPBM 1 and 2 North respectively in Figure 26

The third TBM, also shown in the figure below as EPBM 3a/3b/3c/3d will have to travel four times in total in order to excavate the two tunnels for each of the two branches of the metro line. It will travel approximately 10.5 km in total and will have to be mounted and dismounted each time it starts and finished one sector, which is a very time consuming process. However, we consider that there would be still more economical to do this repetitive and tedious process than it would be to use another TBM for the project.

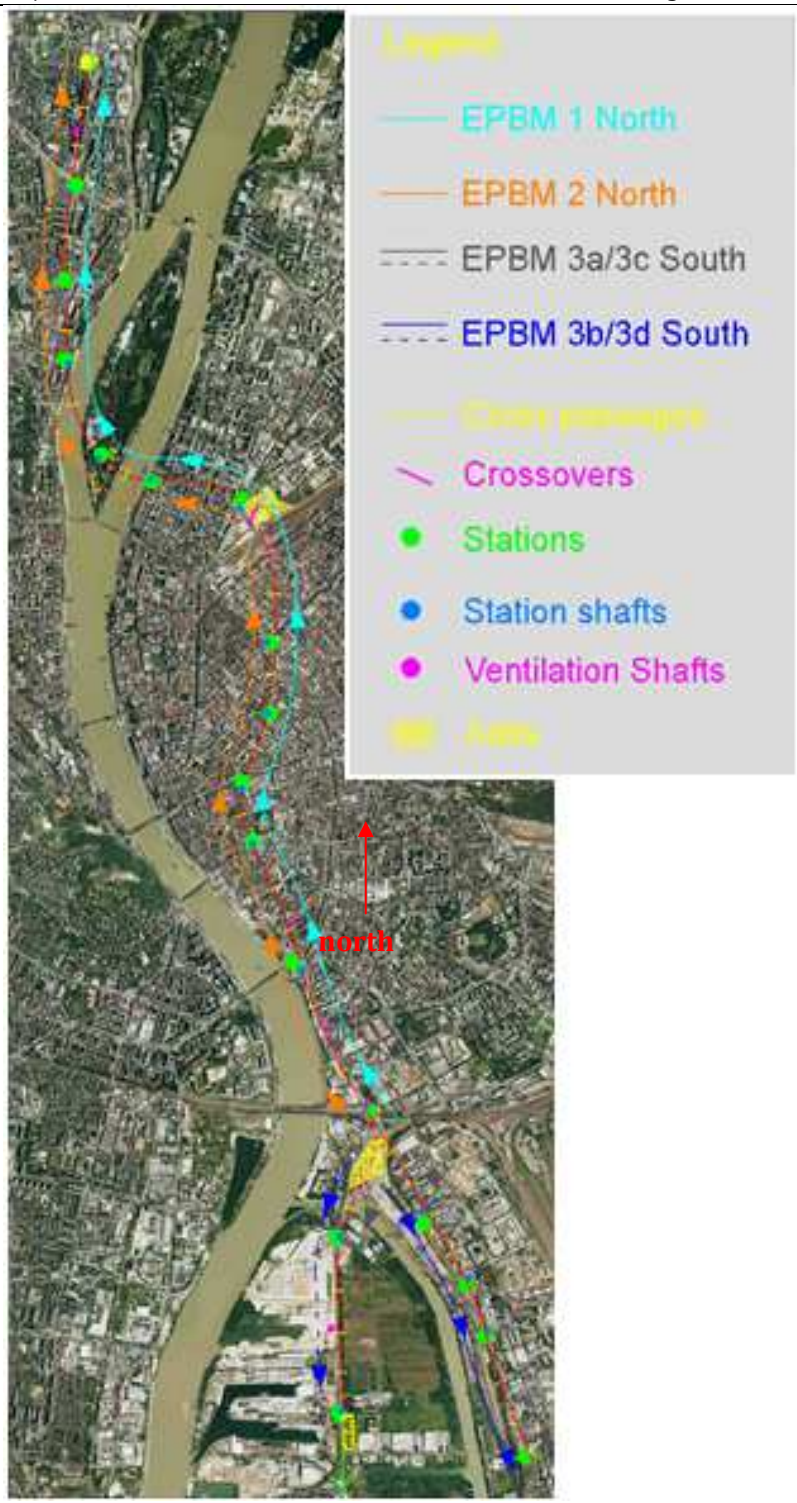

Figure 26 : TBM path for the excavation

Once the method of excavation was defined, the next step was to establish the achievable advancement rates for each sector of the alignment. Some simplifications were made regarding the soil conditions, and for the most part of the tunnel, "good" conditions were accepted. The advancement rates for each type of condition were described in the previous section. This simplification enabled us to make the decision to use less TBMs to excavate the tunnel. Figure 27 shows the excavation scheme proposed for the Budapest metro tunnel. It will be detailed in the following paragraphs.

The first things to be done will forcedly have to be the supply sites, (in yellow in the figure below) as they are absolutely needed to lower the pieces of the TBM and to assemble them. The Szennyviztelep supply site will be done first and we calculated approximately 75 days to excavate it. It is here that

the 3a south EPBM must be assembled and must start excavating as soon as possible as it is one of the most critical steps in the process. Later, the same team can move on to excavate the second supply site in Lehel Ter.

Due to physical and logistics constraints, for most of the construction process, two separate teams will work on the northern and southern parts of the alignment. It can be easily seen how at the beginning, the southern part of the alignment becomes the most critical and will need a great deal of manpower to accomplish the schedule on time. In the first days of the construction, the southern teams will have to work, simultaneously, on the exit sites, the ventilation shafts and the Beothy Utca shaft at the same time. After that critical process, only one team is needed to continue with the plan.

As for the northern part of the alignment the greatest constraint will be the fact that it will be necessary to wait until the whole "train" of the TBM has gone through the LehelTer supply site to be able to begin working from the Konyves Kalman station to the north. That amounts to approximately 530 days until work can be done in the stations. However, the station shafts and the northern ventilation shafts can be excavated before without the problem of interfering with the underground works.

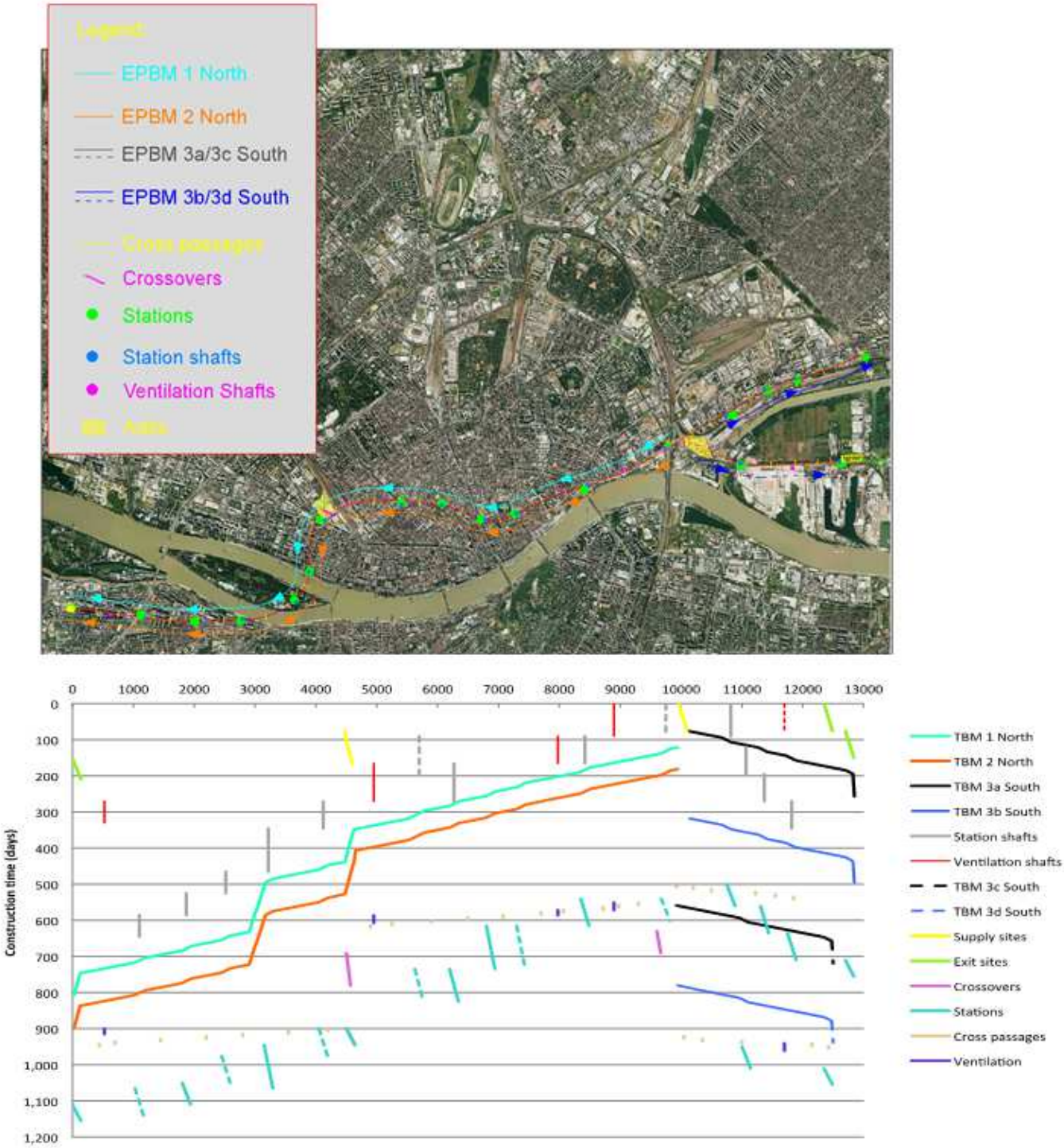

Figure 27: Excavation schedule

4. LIFECYCLE: MAINTENANCE PLAN

Like any other major civil work, a tunnel has to be constantly monitored and maintained in order to ensure its proper functionality through the years it was designed to operate. In our case, the service life of the Budapest metro tunnel was estimated to be 60 years. In urban tunneling there are in general four types of inspections that can be done:

- Daily
- Routine
- Intermediate (every 2-3 years)
- Principal (every 4-6 years)
- Special (to be done after exceptional or unexpected events)

Daily inspections are to be done before and after the operational hours of the line. The safety equipment, rails, switches, lighting and ventilation are visually inspected to ensure its proper functionality. If there is a problem threatening the safe operation of a line, it has to be followed by an immediate repair. If the problem proves to be of greater importance, a closure of a section of the line may even take place.

An intermediate inspection focuses on the structural elements of the tunnel. It usually starts with a cleaning of the tunnel and checking for water leakages, the condition of buffer tanks and rails' fixtures, or cracks on the tunnel wall. It can be followed by either, an immediate repair in case of a major problem or a scheduled repair for the future in case the problems do not threaten the operation of the line. For this project, during the intermediate inspection, much attention needs to be paid to:

- The radial and longitudinal joints of the segmental lining, where, if there are some deformations or some degradation of the joints, those ones can be opened, and there can be water leakages. During daily inspections, these joints will have to be observed for leaks or opening. If they are effectively found, the necessary measures should be taken and reparation has to be scheduled
- The connection between the final linings and the waterproofing systems of the tunnel (segmental lining with waterproof membrane inside) and of the underground installations (Stations, Crossovers, Cross-passages, which have casted concrete lining over either sprayed or solid waterproof membranes). Water leakages should be checked, together with a concrete deformations other the whole lining, which could be induced by an accumulation of water behind the concrete.
- Cracks or displacement of the concrete lining that could be induced by the hydrostatic pressure. Special care should be taken concerning the sites where the metro line passes very close to other underground installations such as other metro lines. As seen before there are 3 sites concerned. Furthermore, necessary inspection should be done for those structures that do not belong to the metro line, but which behavior is influenced by. If cracks or deformations are found, immediate measures must be taken to assure the stability of the affected section and therefore, the safety of the metro users. In addition, because the project is done in a densely populated area, any collapse of the tunnel can have disastrous effects on both human lives and private property.
- Corrosion of the reinforced lining in the underground stations. During the intermediate inspection, that can be done by visual checking: rust color, visible reinforcement bars… If needed, further inspection by further means can be carried out.
- Indicators of settlement. Even if the final lining does not show any cracks or deformation, a settlement at the surface can occur. Some measuring facilities, for triangulation for instance, or for other absolute distance measurements methods, should be set up after the completion of the tunnel at regular intervals following the metro line. Here, settlement can occur especially when the tunnel is at shallow depth or at shaft and cut and cover sites.

In our case, every 3 years, an intermediate inspection has to be done to the metro tunnel.

A principal inspection is a more complex operation as it contains everything from the intermediate inspection, but include the a revision of condition of electrical wires, fixtures in the tunnel, state of water line, sewage line, etc. It will be followed by the repairs scheduled during the intermediate inspections and the repair of the problems found in this inspection, if those one are not too urgent. For our project, a principal inspection is to be done every 6 years. However, this interval (along with the rest of the inspection types mentioned above) may and should be modified according to the conditions encountered during the first years of operation.

Figure 28 shows the proposed maintenance and surveillance plan for the Budapest metro tunnel.

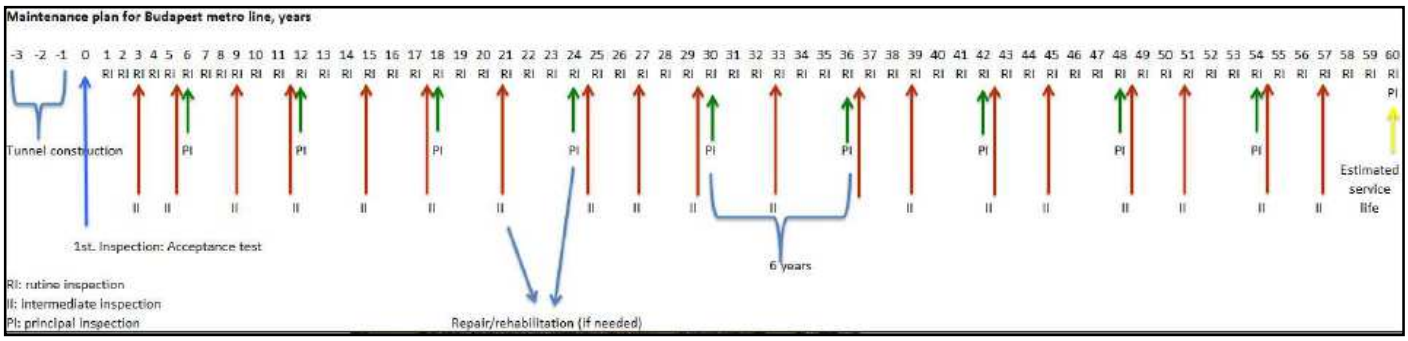

Figure 28: Proposed maintenance plan for the Budapest metro tunnel

5. CONCLUSION

The metro line is completed, from the first excavation to the setting up of the final lining within 3 years and 3,5 months. It seems to be a good estimation in comparison to other metro line projects that have/will be done. For instance, the Athena metro lines 2 (9,22km) and line 3 (3,8km),werebeen completed within 11 years. However, it takes also into account the installation and setting up of all the facilities; also, in one of the projects some geological problems occurred. The construction of the metro line 2 (16km) in Rennes (France) is planned to be built within 5 years.

However, we did not take into account any real economic data. Thus, the tunnel proposed by this project is based on quality above all, which in real life perhaps remains a simplistic approach. It would be interesting to calculate the actual construction costsfor the project developed during the semester and presented in this report.

6. LIST OF FIGURES AND TABLES

Figures

Figure 1: Map of the current Metro lines in Budapest 5
Figure 2: Wished service for the metro line 5 6
Figure 3: The 3 proposed alignments 8
Figure 4: Draft Longitudinal profiles designed for the multi-criteria analysis; refer to part 2.2 for geological matters 9
Figure 5 : Selected Alignment 13
Figure 6: Longitudinal profile of the underground conditions 16
Figure 7: Final Longitudinal profile of the tunnel 18
Figure 8 : TBM used according to the type of ground excavated 20
Figure 9: choice of a shield TBM according to the type of soil crossed 21
Figure 10: cross section of the metro line 22
Figure 11 : Configuration of a supply site 22
Figure 12 : General layout of a Cut and Cover Station (here, Kikötó station) 23
Figure 13: Transversal profile of a cut and cover station (Kikötó station) 23
Figure 14 : Longitudinal profile of a cut and cover station (Kikötó station) 24
Figure 15: Longitudinal profile of a station with shaft 25
Figure 16: Transversal profile of a station with shaft 25
Figure 17 : Plan of a station with shaft 25
Figure 18 : Cross Passage 26
Figure 19: Cross Over 26
Figure 20 : temporary support and water management provided by a shield TBM. 28
Figure 21 : Segmental lining section 31
Figure 22: Segmental ling section and profile 31
Figure 23 : AlpTransit/NEAT-Gotthard-section Bodio/ Switzerland, year 2007, 16.5 km 32
Figure 24 : Sprayed Membrane 32
Figure 25: NBS Frankfurt – Köln/Germany Emergency exit shaft with Sikaplan® WT 2200-31HL2 and Waterstop MP AFI 600/35 33
Figure 26 : TBM path for the excavation 37
Figure 27: Excavation schedule 39
Figure 28: Proposed maintenance plan for the Budapest metro tunnel 41

Tables

Table 1: Basis for the multi-criteria analysis 10
Table 2: Example of application of the multi-criteria analysis for given weights. 11
Table 3: Summary of the sensibility analysis 12
Table 4 : classification of soil zones for designing the temporary supports and ground improvements 29
Table 5 : temporary support and ground improvement to be done according the type of soil excavated 29
Table 6 : Excavation time for supply sites, exit sites and shafts 34
Table 7 : Excavation time for underground installations 35