Underground Construction Technology

Course Lectures

Part 4.2 – Permanent support

Dr Ákos TÓTH

Segmental Lining in TBM Tunnelling

Segmental lining is the support system for shield TBM excavated tunnels.

Pre-cast concrete segments are assembled inside the shield, to form a ring.

The segmental ring becomes the support structure of the tunnel.

Segmental Lining in TBM Tunnelling

Segments erected inside the shield

Tunnel excavated by shield TBM

Segments transported into tunnel

Segmental Lining in TBM Tunnelling

Tunnel finished with segmental lining

Segmental Lining in TBM Tunnelling

Advantages of Concrete Segmental Lining

Quality consistency of the concrete can be easily tested in the segment factory.

Ring erection is done by the TBM, in short time (20~40 min per ring). Rings are positioned with high precision in the shield.

When leaving the TBM shield, the segmental ring is pre-stressed by the grouting.

The segmental ring can take the final loads. No hardening time is necessary. The ground is stabilized instantly by the ring and grouting.

Segmental rings are usually under tangential compression due to tunnel convergence.

Types and Elements of Segments

Single shell linings are often made of reinforced precast concrete segments

Additional Notes on Segment Design

Example of a Reinforced Segment

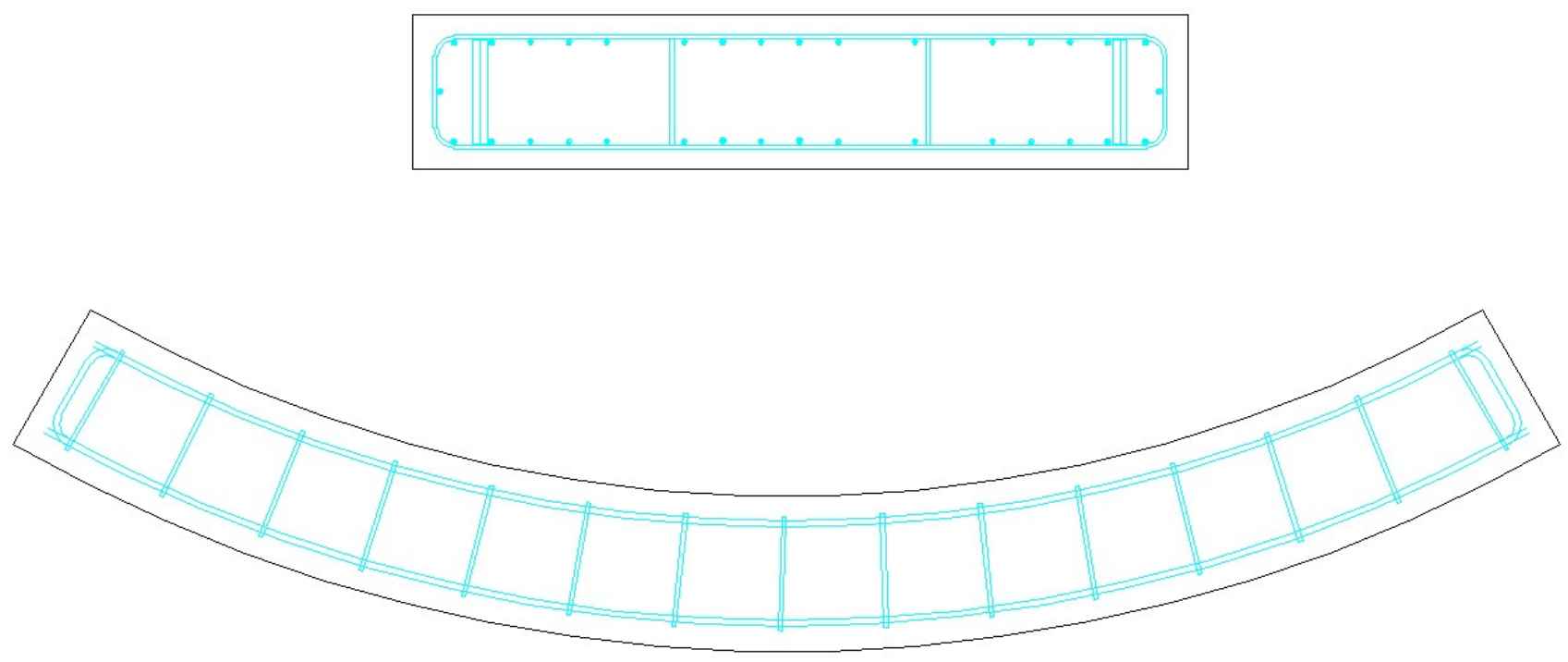

Types and Elements of Segments

Segmental lining includes the following structures and parts:

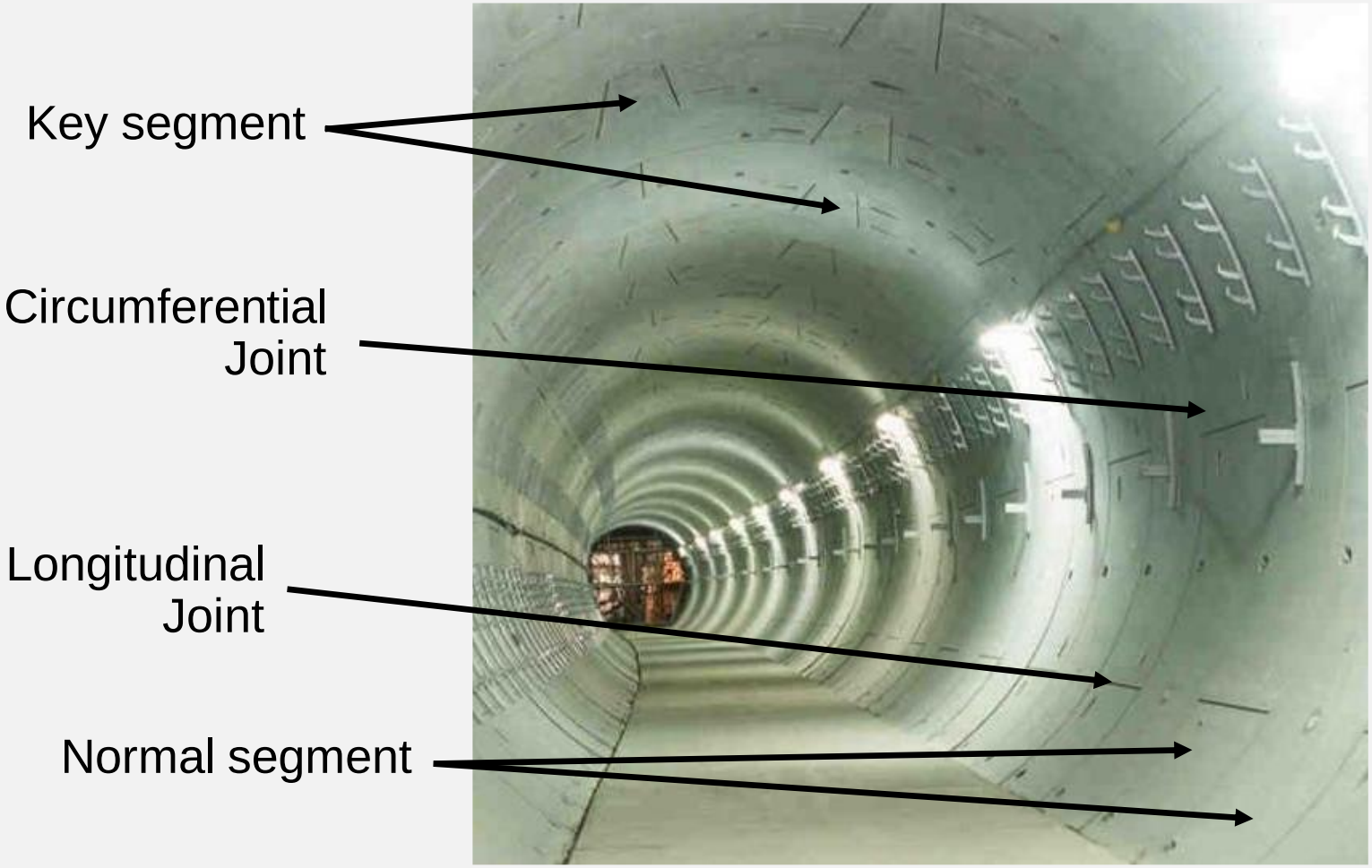

Types and Elements of Segments

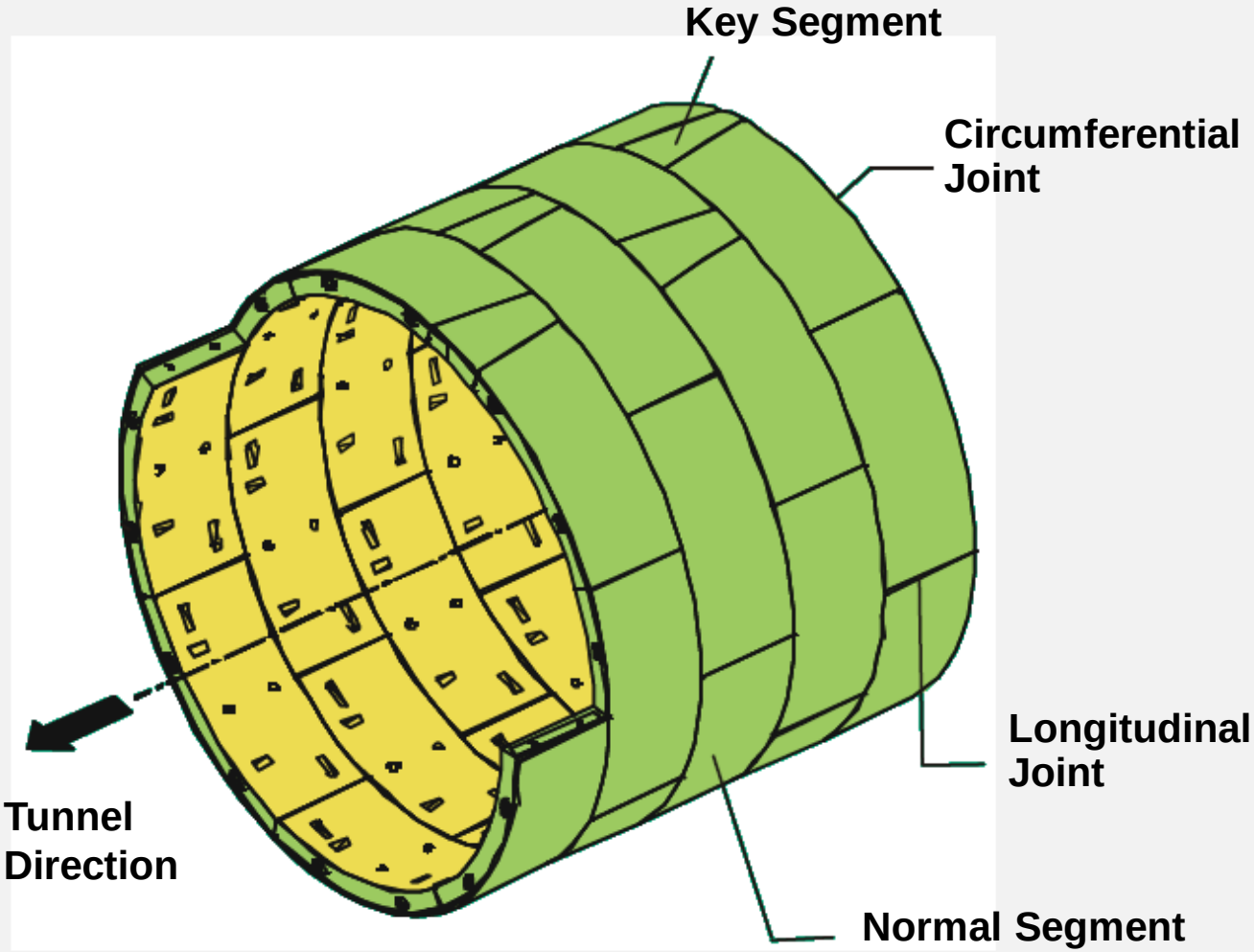

Types and Elements of Segments

Segments are often classified according to their shape:

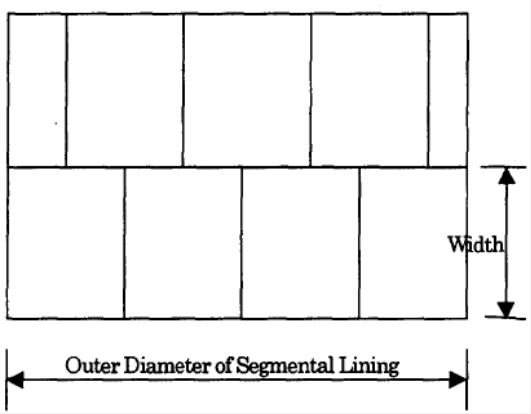

Rectangular segment

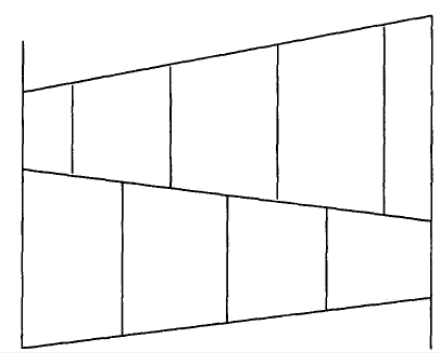

Tapered segment

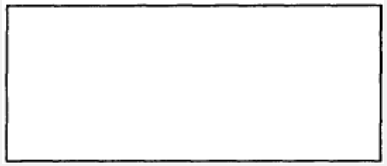

Flat type segment

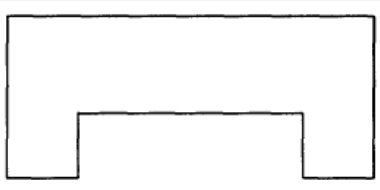

Box type segment

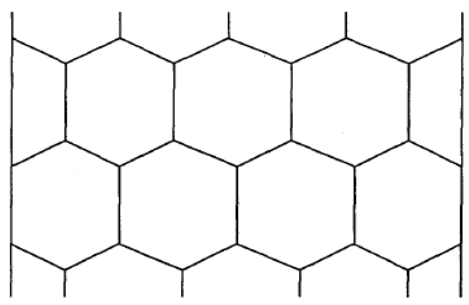

Hexagon segment

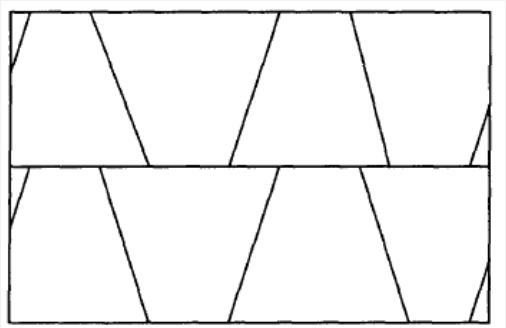

Trapezoid segment

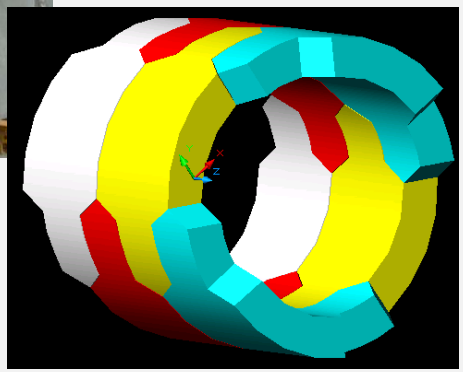

Other types

Types and Elements of Segments

Typical longitudinal joint configuration

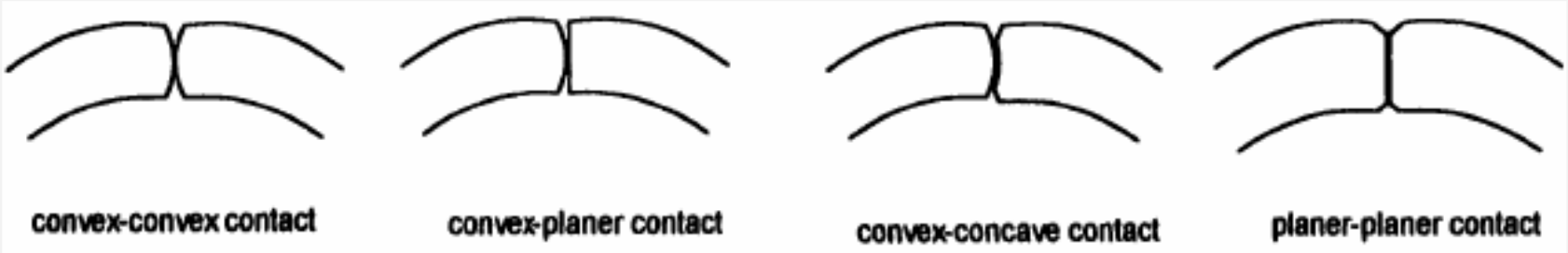

Typical sealing gaskets

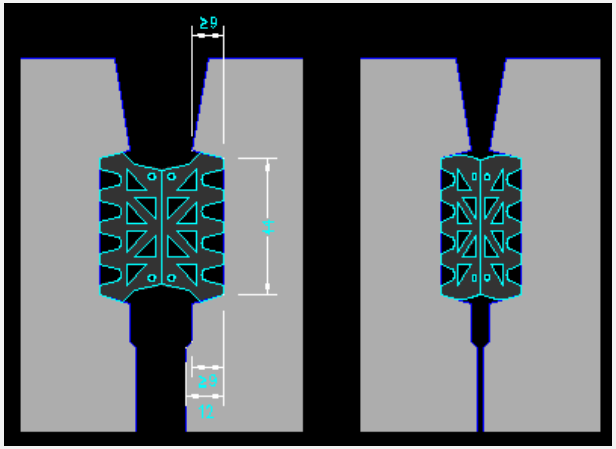

Segment Production

Production of Segment

Segment Production

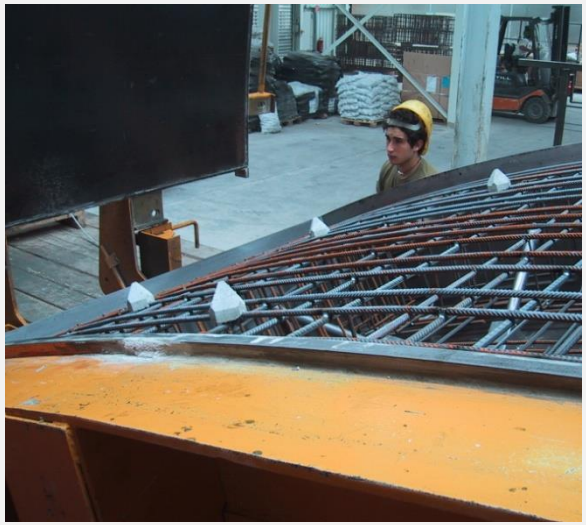

Segmental Lining Design Procedure

- Tunnel lining behind the TBM must be capable of withstanding all loads/actions and combined actions without deforming, especially during ring erection and advance
- Today, the design and dimensioning of a reinf l out b

Ultimate limit states	Serviceability limit states
Failure of a section due to crushing of concrete	Excessive opening of cracks (infiltration, corrosion)
Excessive deformation of steel	Excessive compression of concrete causing microcracking
Instability of shape (buckling, bulging)	Excessive ring deformation
Loss of static equilibrium at ring erection	

ITA Segmental Lining Design Procedure (1)

ITA-Working Group Research:
Guidelines for Design of Shield Tunnel Lining, 2000

Following the planning works for the tunnel, the lining of a shield tunnel is designed according to the following sequence:

1. Adherence to specification, code or standard

The tunnel lining should be designed according to the appropriate specification standard, code or standards, which are determined by the persons in charge of the project or decided by discussion between these persons and the designers.

ITA Segmental Lining Design Procedure (2)

2. Decision on inner dimension of tunnel

The inner diameter of the tunnel to be designed should be decided in consideration of the space that is demanded by the functions of the tunnel. This space is determined by:

- the construction gauge and car gauge, in the case of railway tunnels
- the traffic volume and number of lanes, in the case of road tunnels
- the discharge, in the case of water tunnels and sewer tunnels;
- the kind of facilities and their dimensions, in the case of common ducts

ITA Segmental Lining Design Procedure (3)

3. Determination of load condition

The loads acting on the lining include earth pressure and water pressure, dead load, reaction, surcharge and thrust force of shield jacks, etc. The designer should select the cases critical to the design lining.

4. Determination of lining conditions

The designer should decide on the lining conditions, such as dimension of the lining (thickness), strength of material, arrangement of reinforcement, etc.

ITA Segmental Lining Design Procedure (4)

5. Computation of member forces

The designer should compute member forces such as bending moment, axial force and shear force of the lining, by using appropriate models and design methods.

6. Safety check

The designer should check the safety of the lining against the computed member forces.

ITA Segmental Lining Design Procedure (5)

7. Review

If the designed lining is not safe against design loads, the designer should change the lining conditions and design lining. If the designed lining safe but not economical, the designer should change the lining conditions and redesign the lining.

8. Approval of the design

After the designer judges that the designed lining is safe, economical and optimally designed, a document of design should be approved by the persons in charge of the project.

Shield tunnel lining design (ITA 2000)

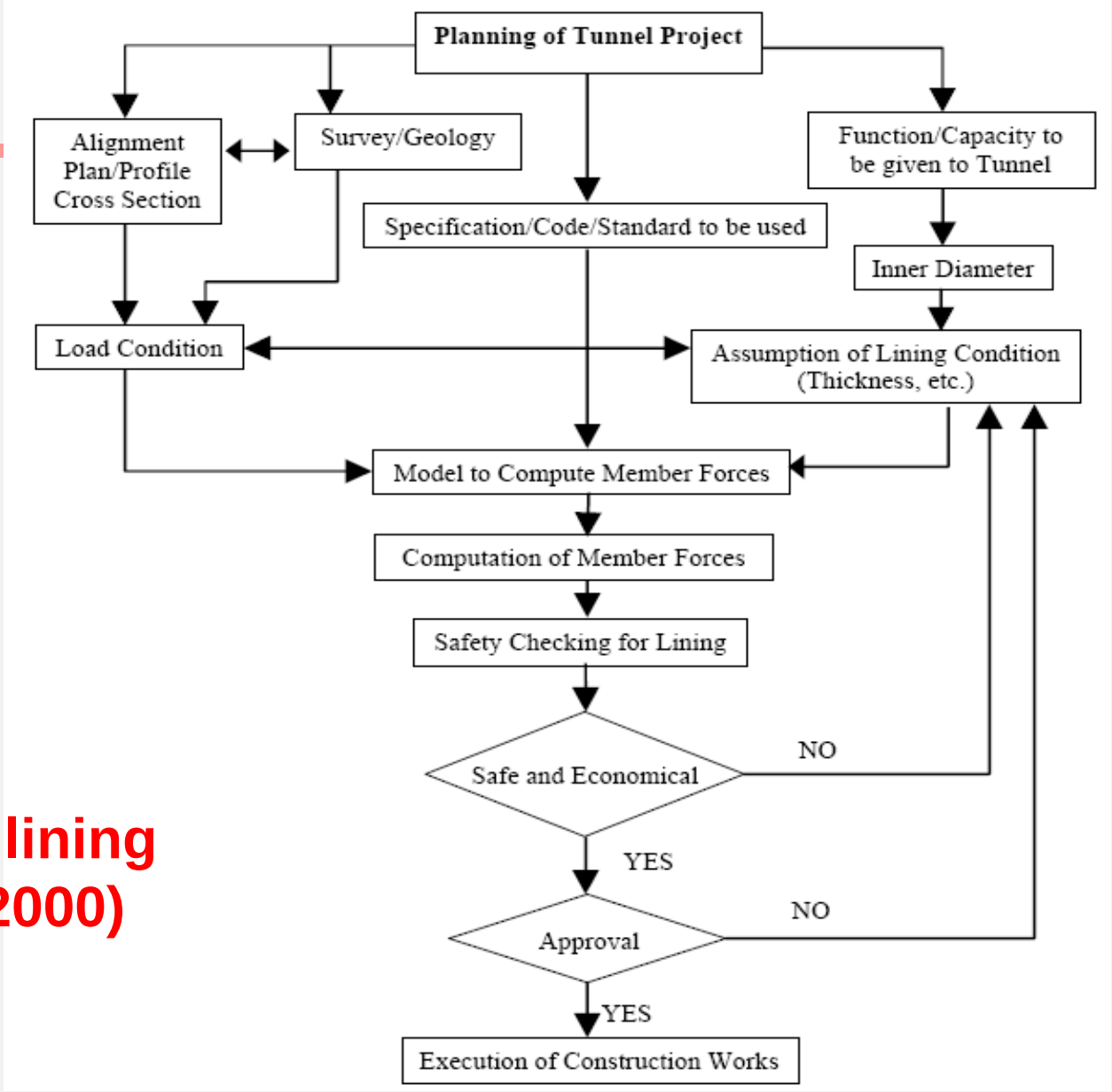

Ground Pressures and Lining Loads

Segmental lining is a structure to withstand the load and pressure primarily from the ground.

Loads to be considered on the lining come from various sources and change at different stages. It can vary from zero external load to high squeezing pressure and high internal pressure.

In design, both short term (operational) and long term (permanent ground pressure) loads need to be considered.

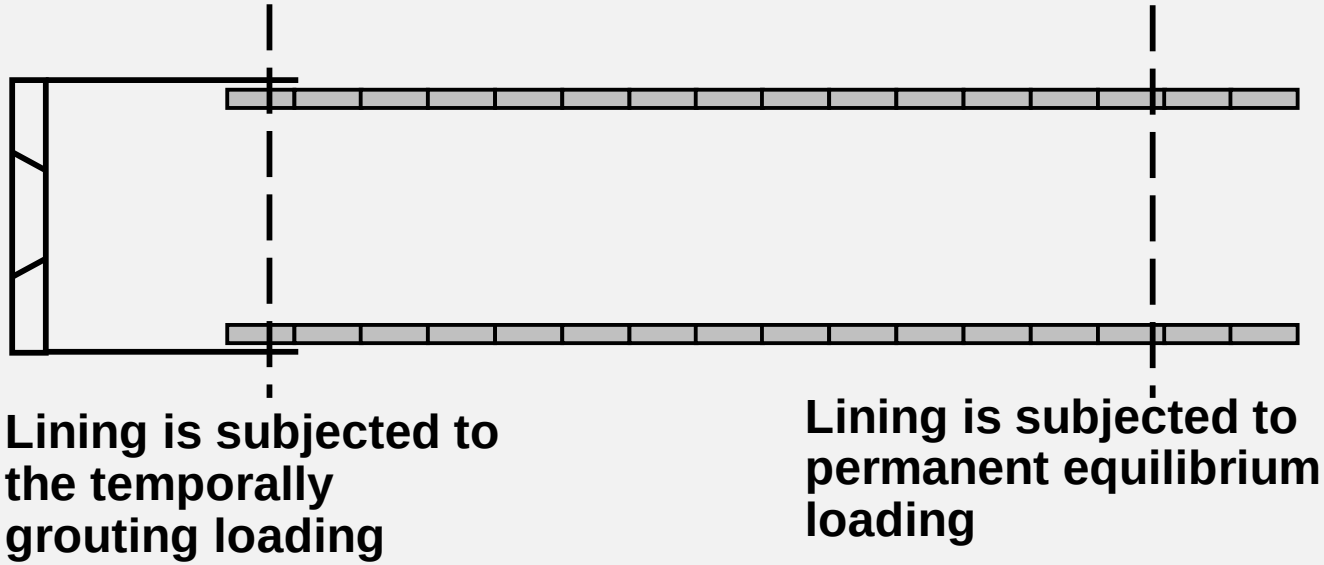

TBM excavation process

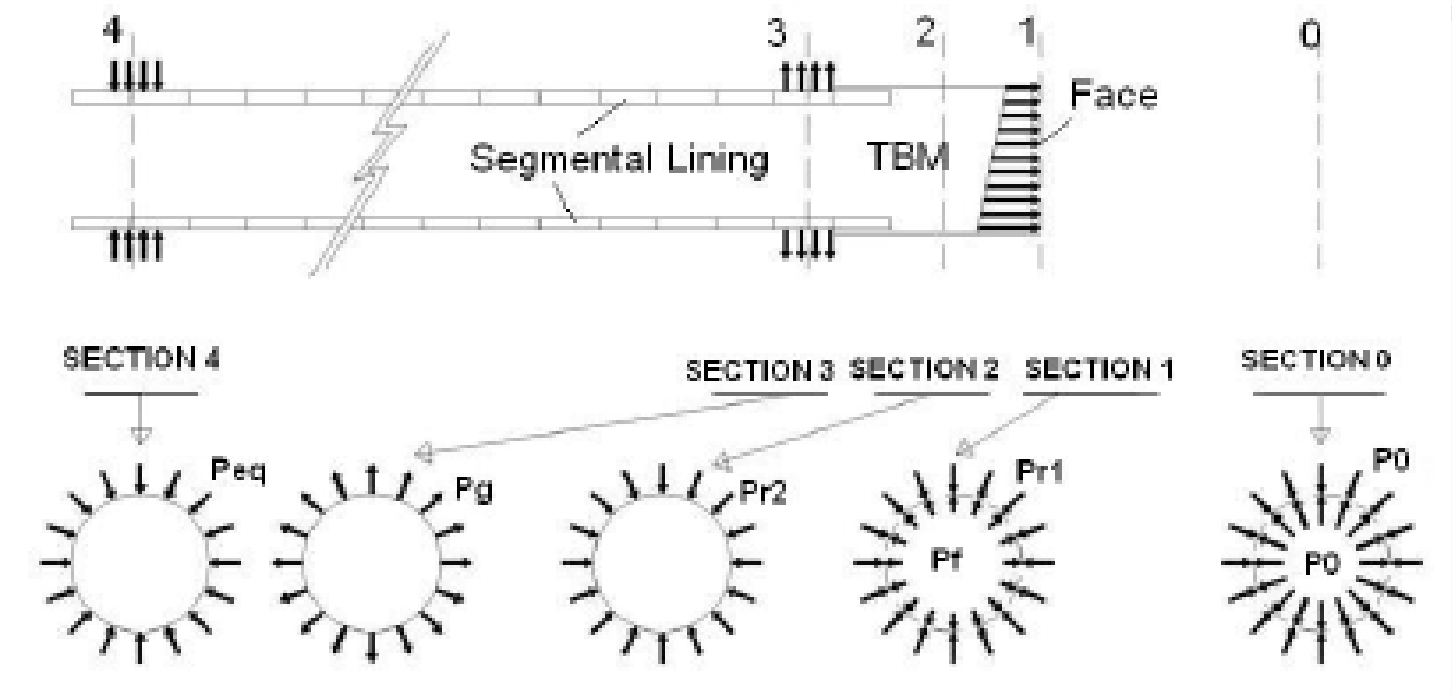

0 far away from the face: initial state of stress in ground is not affected P_0

1 right at the face: TBM cutting wheel interacts with the ground P_{r1}

2 TBM shield: convergence of the ground P_{r2}

3 segmental lining: grouting load P_g

4 hardened grout behind the lining: permanent equilibrium load P_{eq}

Lining Loads (JSCE, 1996)

1. Vertical and horizontal earth pressure
2. Water pressure
3. Dead weight
4. Effects of surcharge
5. Subgrade reaction (Soil reaction)
6. Internal loads
7. Construction loads
8. Other loads (e. g. effects of earthquakes, …)
9. Effects of two or more shield tunnels construction
10. Effects of working in the vicinity
11. Effects of ground subsidence
12. Others

Primary loads

Secondary loads

Special loads

- Various combinations of the loads can be considered according to the purpose of the tunnel usage

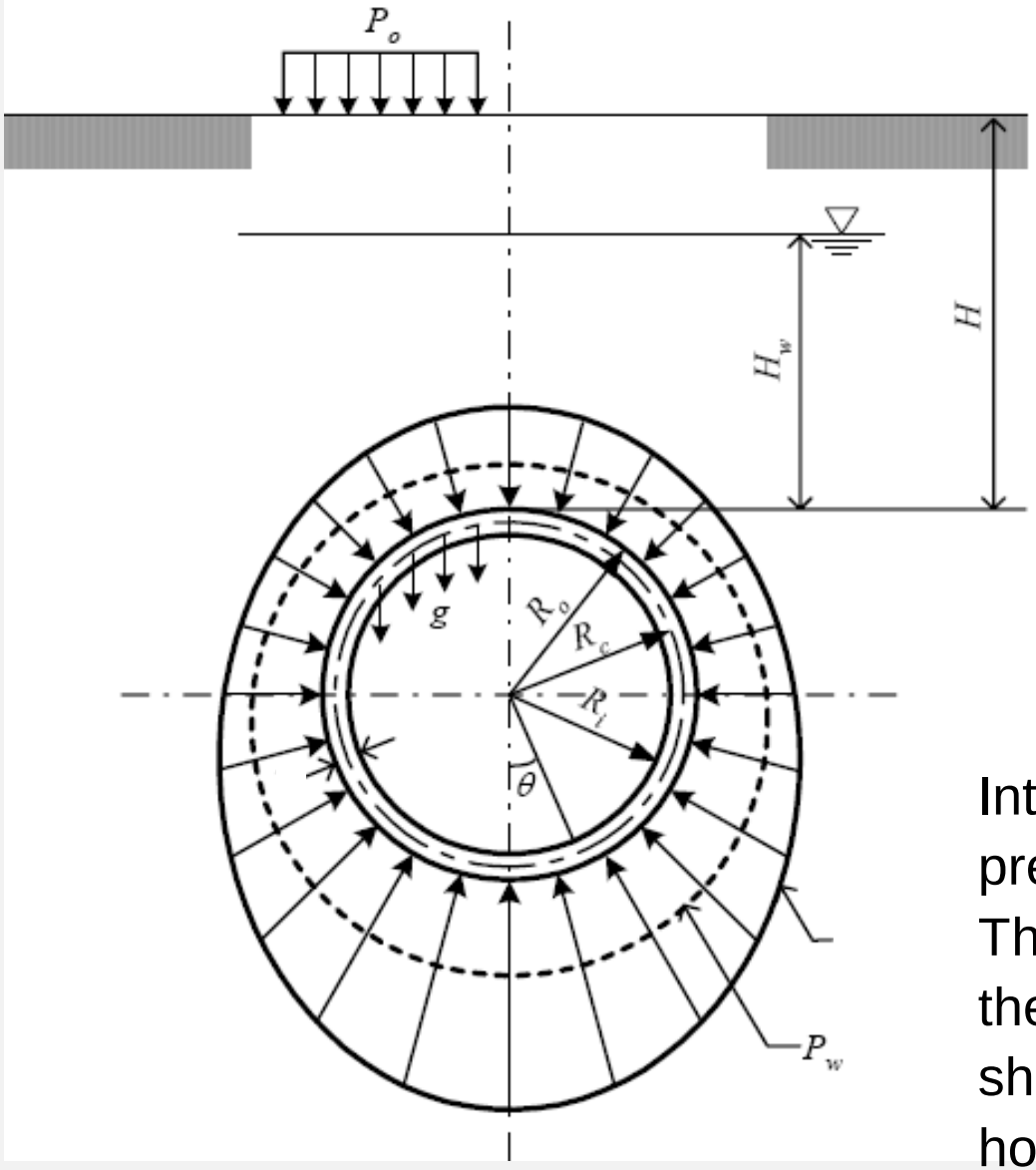

P_o = Surcharge loads

P_w = Hydraulic pressure

g = Self-weight of lining

R_o = Outer radius of tunnel

R_i = Inner radius of tunnel

R_c = Radius of tunnel at thickness center

H = Covering depth

H_w = High of ground water table from tunnel top

Interaction between ground pressures and loads on lining. The ground pressure should act in the radial direction on the lining or should be divided into vertical and horizontal ground pressures

Conventional Load Model (ITA 2000, JSCE 2001)

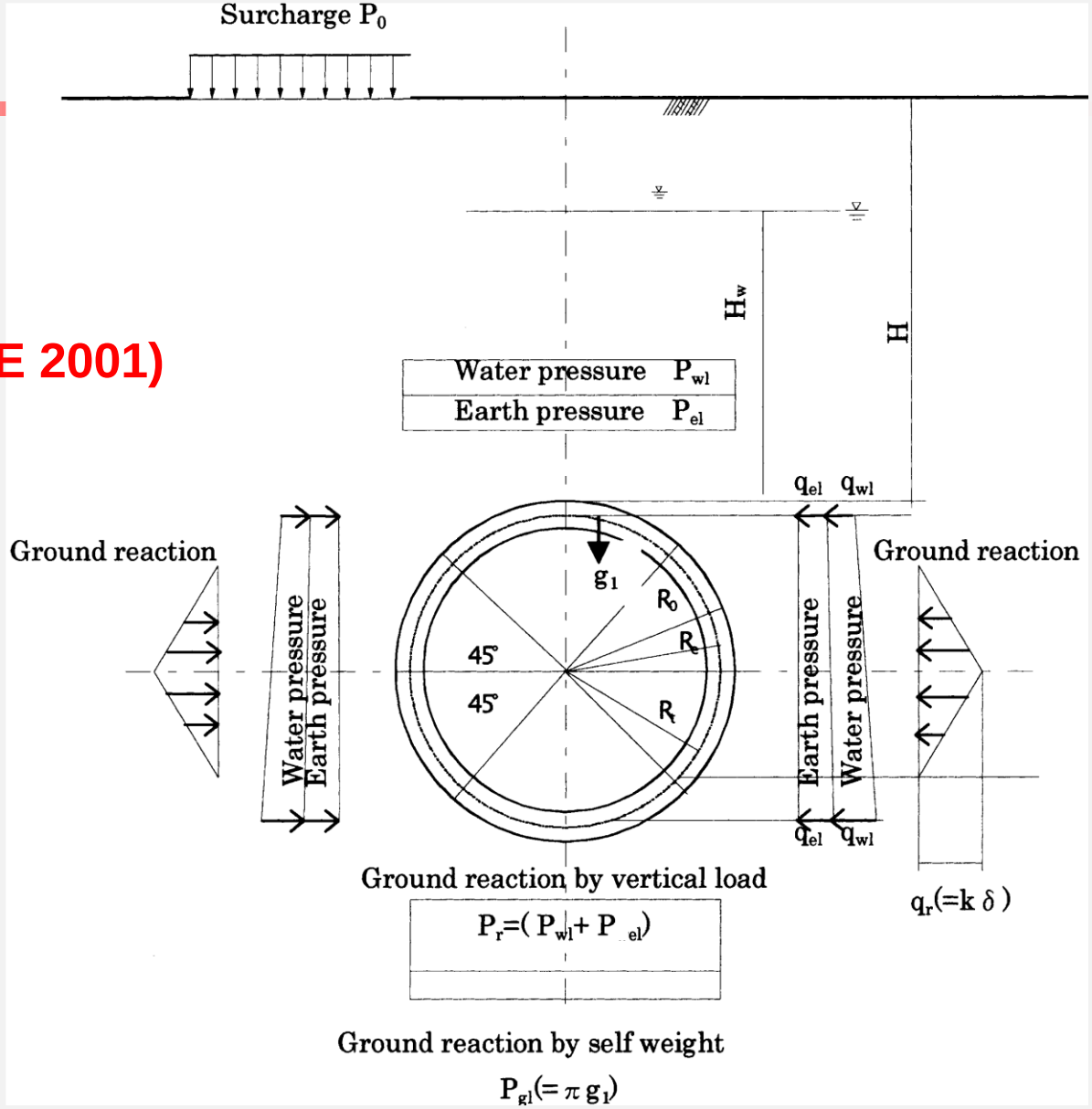

Vertical Earth Pressure

For **shallow soil tunnels**, the vertical ground pressure P_{e1} (at roof) is a uniform equal to the overburden pressure (effective stress).

$$P_{e1} = P_0 + \sum \gamma_i H_i + \sum \gamma_j H_j$$

γ_i and H_i are unit weight and thickness of soil of stratum *i* above groundwater; γ_j and H_j are unit weight and thickness of soil of stratum *j* below groundwater; P_0 is the surcharge.

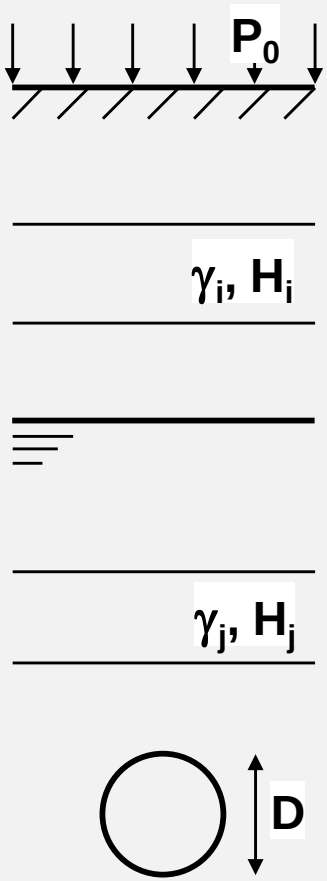

Vertical Earth Pressure

For **deep soil tunnel**, the vertical reduced earth pressure can be adopted in accordance with Terzaghi's formula, Protodiaconov's formula or other equivalent methods**.**

By using Terzaghi's formula:

$$\begin{cases} P_{e1} = \gamma h_0 & \rightarrow \text{tunnels above groundwater table} \\ P_{e1} = \gamma' h_0 & \rightarrow \text{tunnels below groundwater table} \end{cases}$$

h_o is equivalent overburden thickness of the soil (reduced earth pressure), γ is soil unit weight

Vertical Earth Pressure

For rock tunnels, the vertical ground pressure P_{e1} can be estimated from Terzaghi's Rock Load Factor.

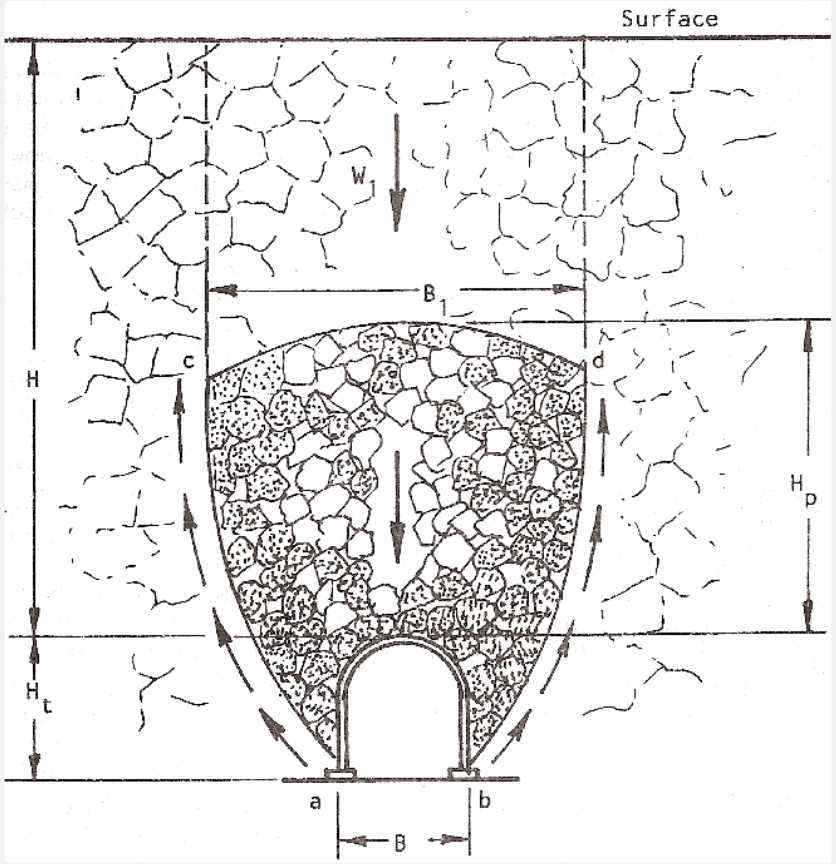

Terzaghi's formula

$$h_0 = B_1[1 - c/(B_1\gamma)][1 - \exp(-k_0 \tan\phi H / B_1)] / k_0 \tan\phi + P_0 \exp[-k_0 \tan\phi H / B_1] / \gamma$$

$$B_1 = R\cot(\pi/8 + \phi/4)$$

H is total soil overburden

P_o the surcharge

k_0 the ratio between lateral and vertical earth pressure = 1

c the cohesion

ϕ the friction angle

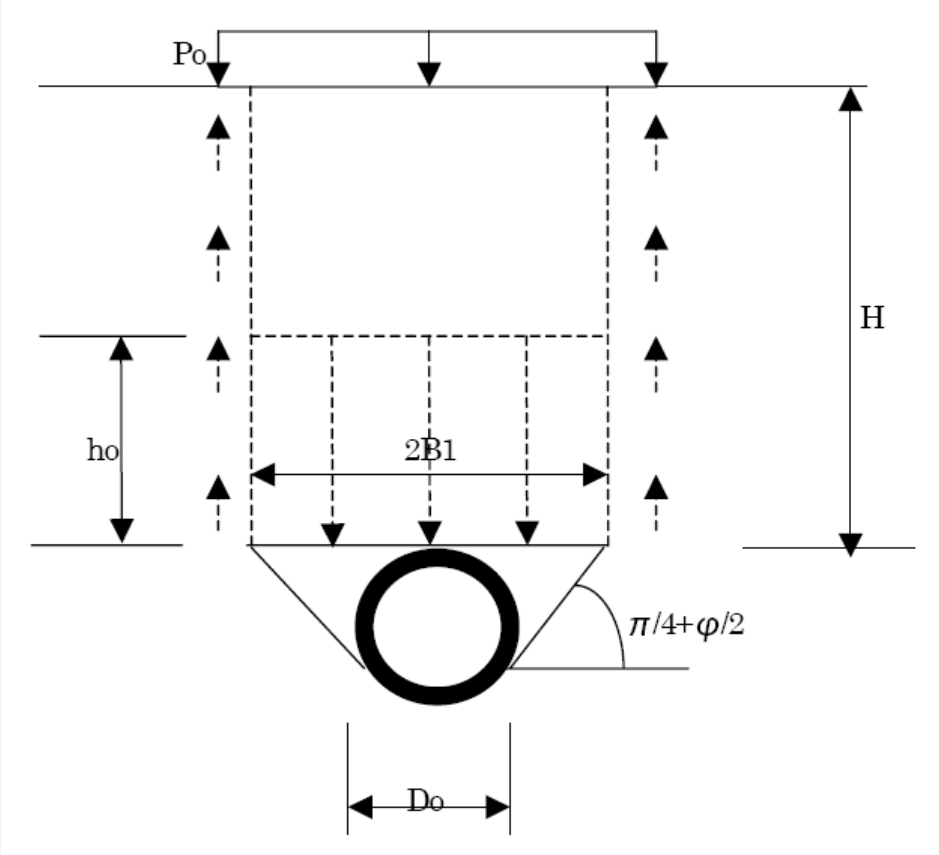

Horizontal Earth Pressure

The horizontal earth pressure is assumed to be a uniformly varying load that increases with increasing depth. It is derived from the vertical earth pressure multiplied by the coefficient of lateral earth pressure (λ). The horizontal ground pressure should be the uniformly varying load acting on the centroid of lining from the crown to the bottom.

The value of coefficient of lateral earth pressure to be used in the design calculation should be between the value of coefficient of lateral earth
pressure at rest and the one of coefficient of active lateral earth pressure.

Type of soil		λ	N value guideline
Sandy soil	Very dense	0.45	$30 \leq N$
	Dense	0.45–0.50	$15 \leq N < 30$
	Medium, loose	0.50–0.60	$N < 15$
Clayey soil	Hard	0.40–0.50	$8 \leq N \leq 25$
	Medium, stiff	0.50–0.60	$4 \leq N < 8$
	Soft	0.60–0.70	$2 \leq N < 4$
	Very soft	0.70–0.80	$N < 2$

Horizontal Earth Pressure

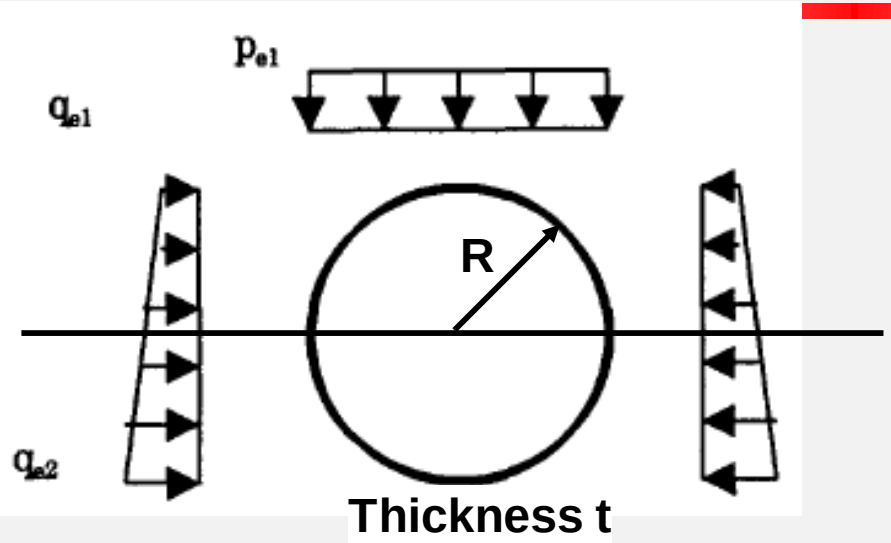

$$q_e = \frac{(q_{e1} + q_{e2})}{2}$$

$$q_{e1} = \lambda(P_{e1} + \gamma \cdot t/2)$$
$$q_{e2} = \lambda[P_{e1} + \gamma \cdot (2R - t/2)]$$

→ tunnels above groundwater table

$$q_{e1} = \lambda(P_{e1} + \gamma' \cdot t/2)$$
$$q_{e2} = \lambda[P_{e1} + \gamma' \cdot (2R - t/2)]$$

→ tunnels below groundwater table

Water pressure

The water pressure on the tunnel is assumed to act in the direction to the centre of the ring, which increases in direction of depth from the ground water level.

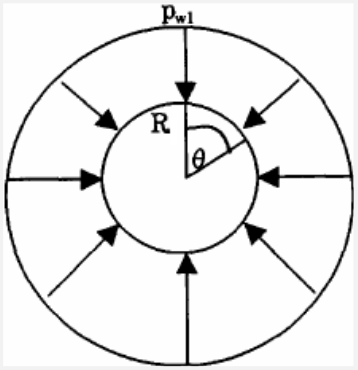

$$P_{w1} = \gamma_w H_w$$

$$P_w = P_{w1} + \gamma_w R_c (1 - \cos\theta)$$

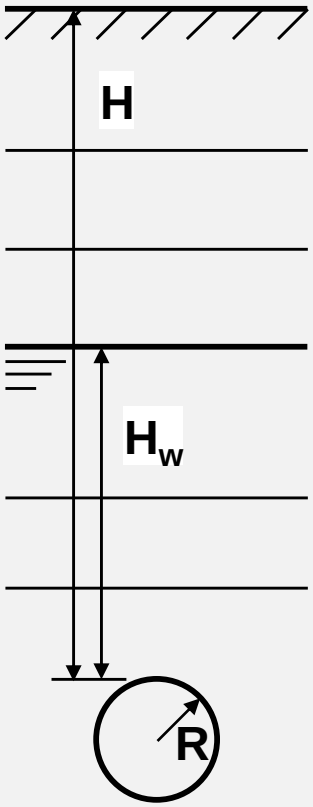

P_w = water pressure around the tunnel

γ_w= 10 kN/m^3, water density

Dead Weight

The dead weight is a vertical load (per unit length in longitudinal direction) , distributed along the centroid of the cross section of tunnel lining can be calculated by the following equation

$$P_g = \frac{W}{(2\pi R)}$$

where:

W = Dead weight of the primary lining (per unit length in longitudinal direction);

R = Radius of centroid of the primary lining

→ If the section is rectangular the formula becomes: $\boxed{P_g = \gamma_C \cdot t}$

with:

γ_c = 26 kN/m^3, is the unit weight of RC segment

t = thickness of the segment

Effects of surcharge

•Other loads may act on lining as the surcharge, increasing the resulting earth pressure action on the lining itself:

- Road traffic load,
- Railway traffic load,
- Weight of buildings

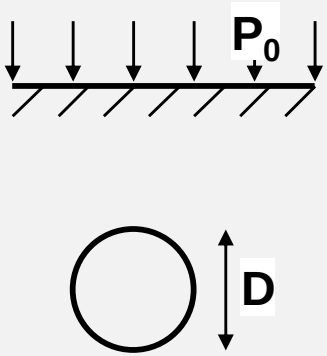

Subgrade reaction

•For computing the member forces in the lining it is necessary to determine magnitude and direction of the subgrade reaction.

•The subgrade reaction can be split into 2 components:

1. The reaction to vertical loads, independent of the displacement of ground (p_{e2})
2. the reaction dependent on the displacement of ground (***Soil reaction***)

The bedded rigid frame model can evaluate the subgrade reaction as the **spring** force.

If the member forces are computed with FEM, then the plain strain elements simulating ground are evaluated as springs for the subgrade reaction.

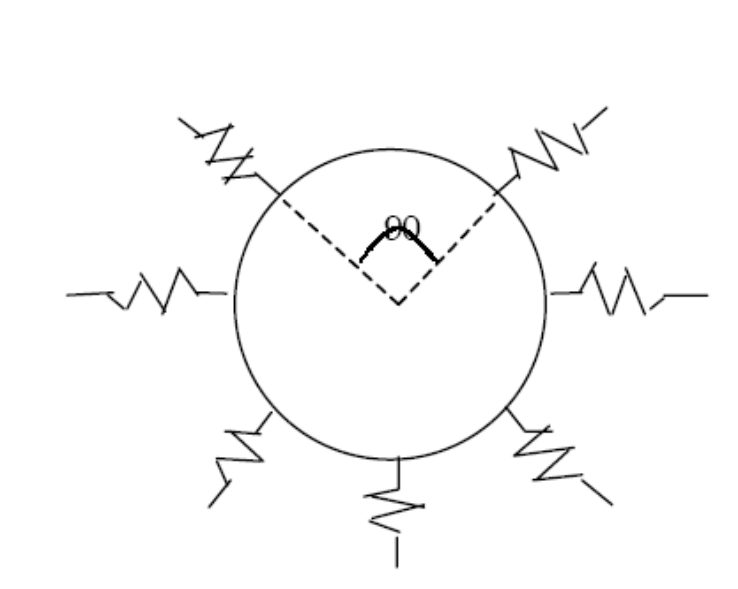

Subgrade reaction

- Vertical reaction
- The reaction independent of the displacement of ground can be calculated by considering the acting loads:
  - Vertical load (considering also the surcharges),
  - Water pressure
  - Self weight

$$P_{e2} = P_{e1} + P_{w1} + \pi P_g - P_{w2}$$

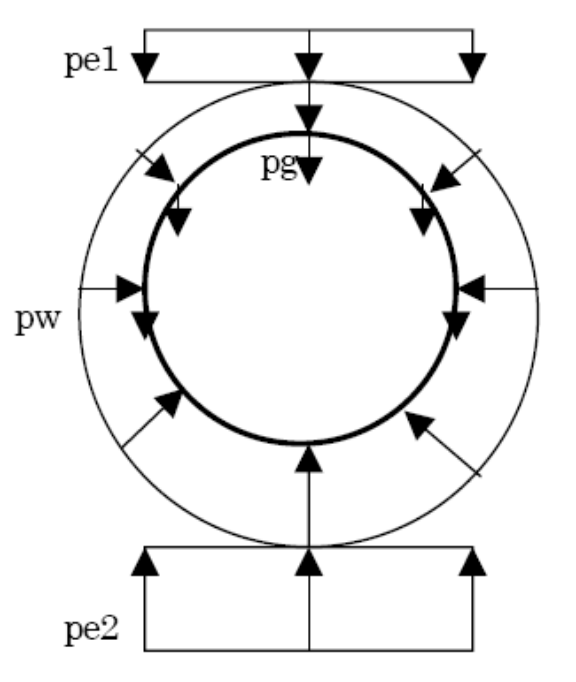

Subgrade reaction

Soil reaction

Soil reaction is modelled as ground springs around the tunnel and is assumed to be proportional to tunnel deformation:

$$q_r = k\ \delta$$

The value of k coefficient of subgrade reaction depends on the ground stiffness and the radius of lining.

The displacement of the lining δ is decided by the ground stiffness and the rigidity of segmental lining.

The rigidity of the segmental lining depends on the rigidity of the segments, their number and the type of joints.

Internal loads

•In some cases the load caused by facilities and equipment suspended from the ceiling of tunnel or inner water pressure should be investigated since they might modify the charges distribution in the segment itself and thus the equilibrium of the whole ring.

Construction loads

In many cases, temporary loads are more important than the final loads from earth and water pressure, and for analysing in detail the distribution of charges in the segment they must be calculated.

For an individual segment it should be considered:

- Segment lifting, stacking and transporting
- Erection of segment and ring assembling
- Thrust for TBM advancing
- Grouting pressure

Construction loads

- Storage loads
- After mould stripping, segments are set down and stacked on supports. Timber blocks are usually placed between segments.
- Storage and handling (e.g. turning, packing and then loading-out operations, supply to the workface…) influence the bending moment.

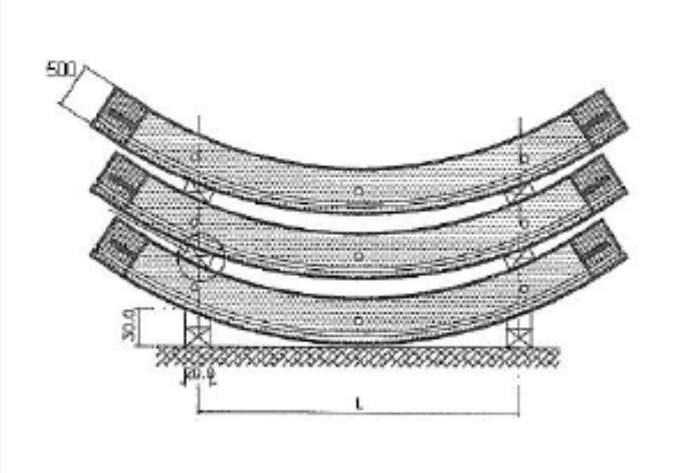

Construction loads

Storage loads

The action effects during transport and storage can be calculated as:

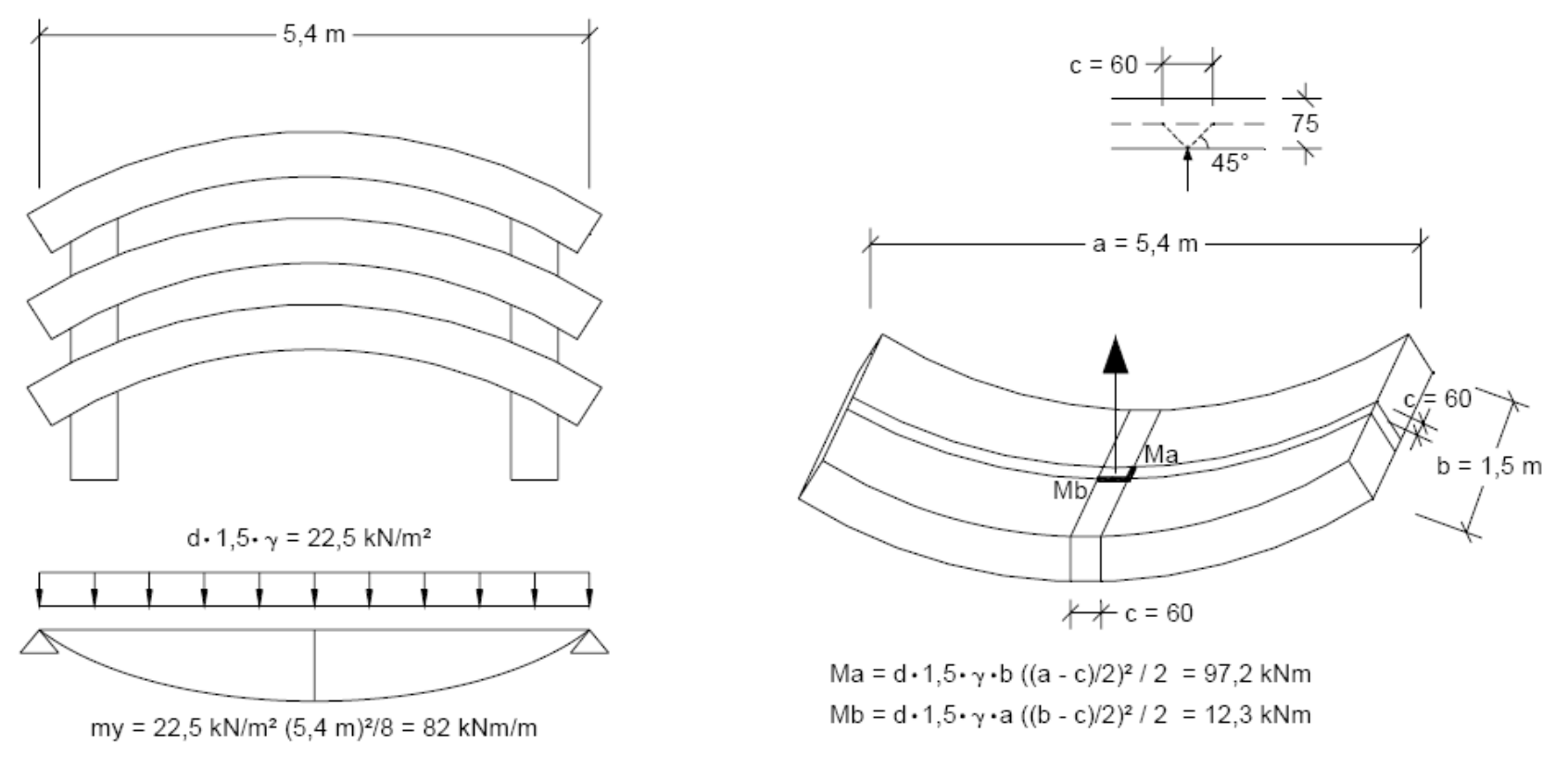

→ The maximum effect will be taken into account

Construction loads

- Erection loads
- During erection, the lining is subjected to a number of loads such as:
- Compressive (possibly eccentric) loads from the longitudinal thrust of the TBM;
- shear forces due to differential deformations between adjacent rings;
- forces resulting from segments overhanging during ring assembly;
- possible bumping impact loads;
- loads applied by the assembly systems retained (bolts, anchor bolts or plugs)

Construction loads

•Grouting loads

•Once installed, the lining should withstand the back-fill grouting pressure acting on its extrados when the ring leaves the shield. Primary grouting pressure is applied to fill up the tail void behind the TBM. For normal conditions, when a quite fluid mortar is used, the grouting pressure can be calculated constant around the ring. If higher that the surrounding water pressure (min 1 bar higher) this annular grouting pre-stresses the ring and the enclosing ground.

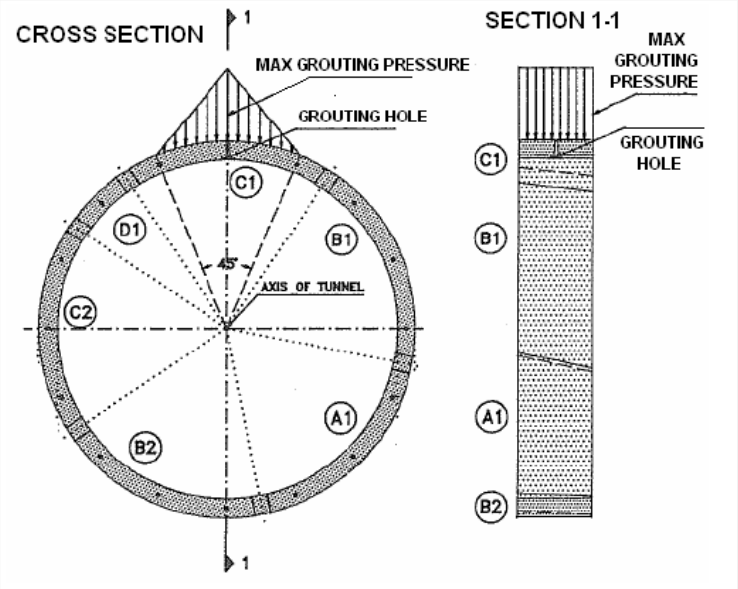

Secondary grouting pressure is a transient type loads resulting from a localised increase in grouting pressure directly behind the segment grouting holes

Construction loads

•Thrust Jacking Loading

•During tunnel construction the segments should support jack thrust for advancing and ensure the function of a lining structure immediately after the shield is advanced.

Thrust force of shield jacks is a temporary load which acts on the segment as a reaction force letting the shield advancing. Among the construction loads, it is the most important and should be verified both in radial and circumferential direction

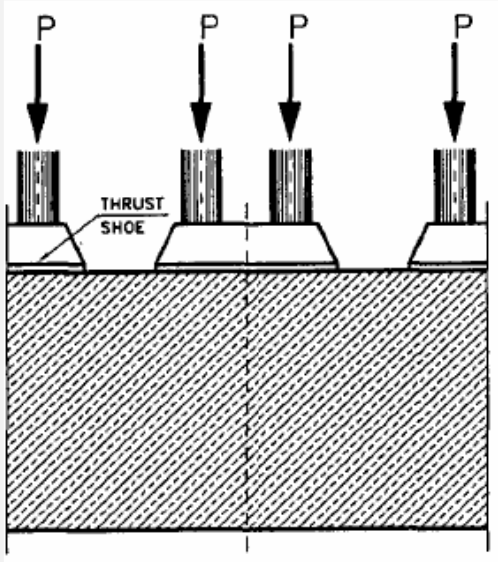

The stresses induced by the jacks induce splitting forces and should be calculated by a FEM calculation

Construction loads

- Trailer load
- Trailer chassis and other service loads can be applied on lining, including main bearing loads, divided by number of wheels.
- The loads induced by the trailer and by any fixations in the segments normally do not influence the reinforcement.

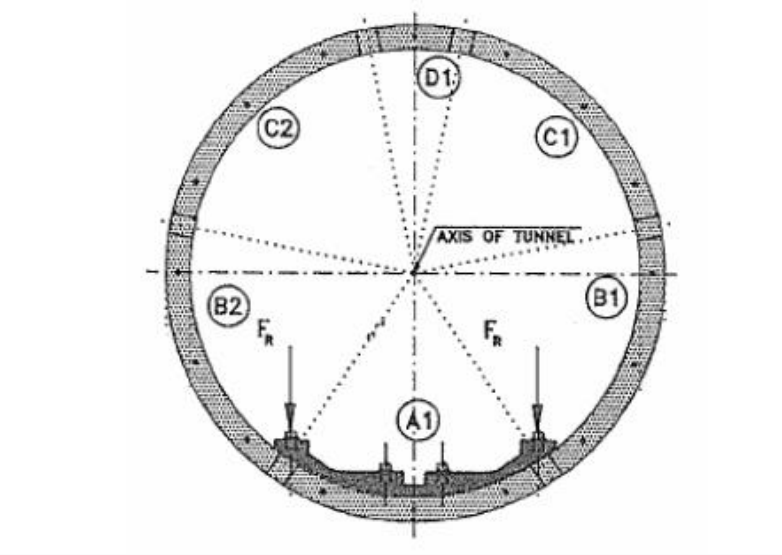

Other loads on the segment

Other loads include loads due to construction, working in close proximity, ground settlement, multiple parallel tunnel construction, internal loads, concrete shrinkage, earthquakes and unusual load cases/accidental actions such as impact by railway vehicles, explosions, fire loads, disaster load case of flooding inside the tunnel, etc.

Evaluation of the surrounding ground dynamic characteristics may be necessary in high seismic risk areas

when fireproof concrete is used, an important aspect for the construction phase is that each segmental ring must be provided with adequate fire protection immediately following assembly

Other loads on the segment

Temperature

Temperature influence in the final state is avoided by the shielding effect of the fire protection lining layer.

However, in the case of certain structures (very deep tunnels, energy conveyance tunnels, etc.), climatic temperature-induced actions (such as uniform temperature variations and temperature gradients) must be considered.

Structural Design of Segment - Principles

The design calculation of the cross-section of tunnel should be done considering the following **critical sections**:

(1) deepest overburden

(2) shallowest overburden

(3) highest groundwater table

(4) lowest groundwater table

(5) large surcharge

(6) eccentric loads

(7) unlevel surface

(8) adjacent tunnel at present or planned one in the future

Structural Design of Segment - Principles

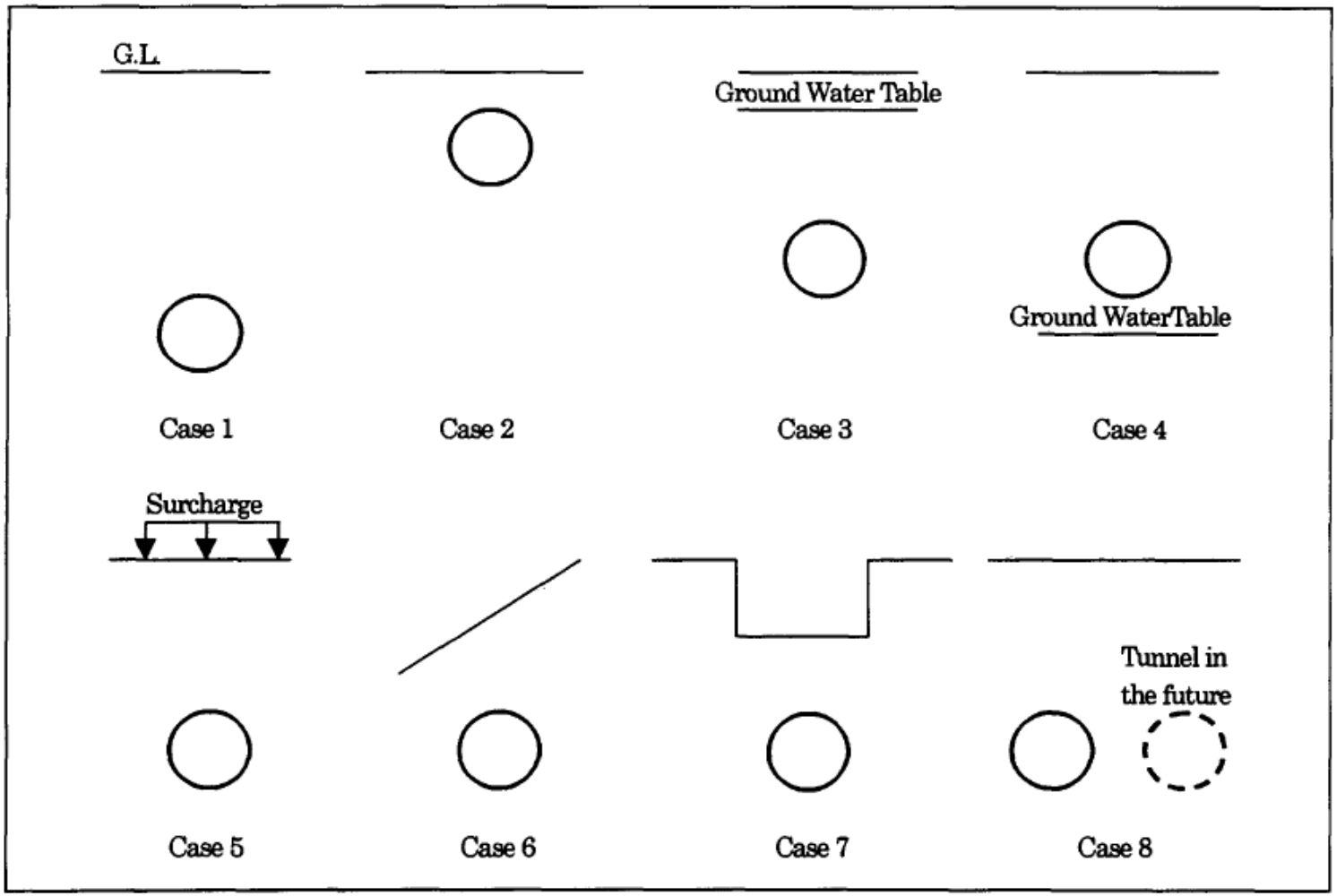

Structural Design of Segment

- The notations used for the member forces in the structural calculation of lining is defined as follows:
  - Axial force (N)
  - Shear force (Q)
  - Bending moment (M)

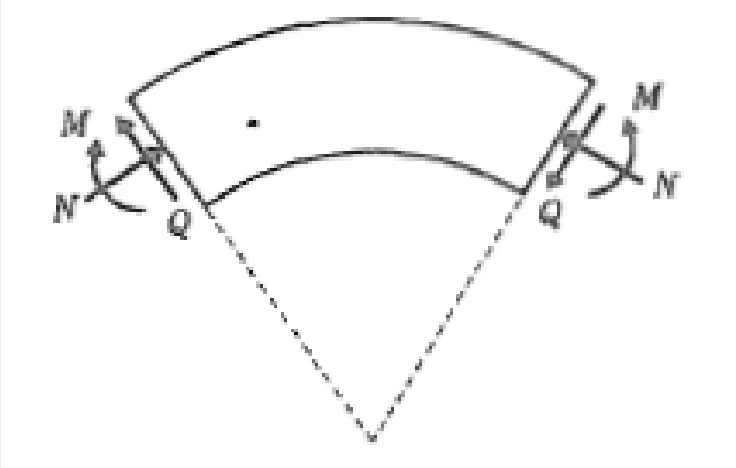

- The member forces are computed using various methods:
- (1) Elastic Equation Method
- (2) Bedded Frame Method
- (3) Finite Element Method (FEM)
- (4) Other Analytical Methods

Elastic Equation Method

A simple method:

- water pressure is evaluated as the combination of vertical uniform load and horizontally uniformly varying load
- horizontal sub-grade reaction is simplified as a triangularly varying load

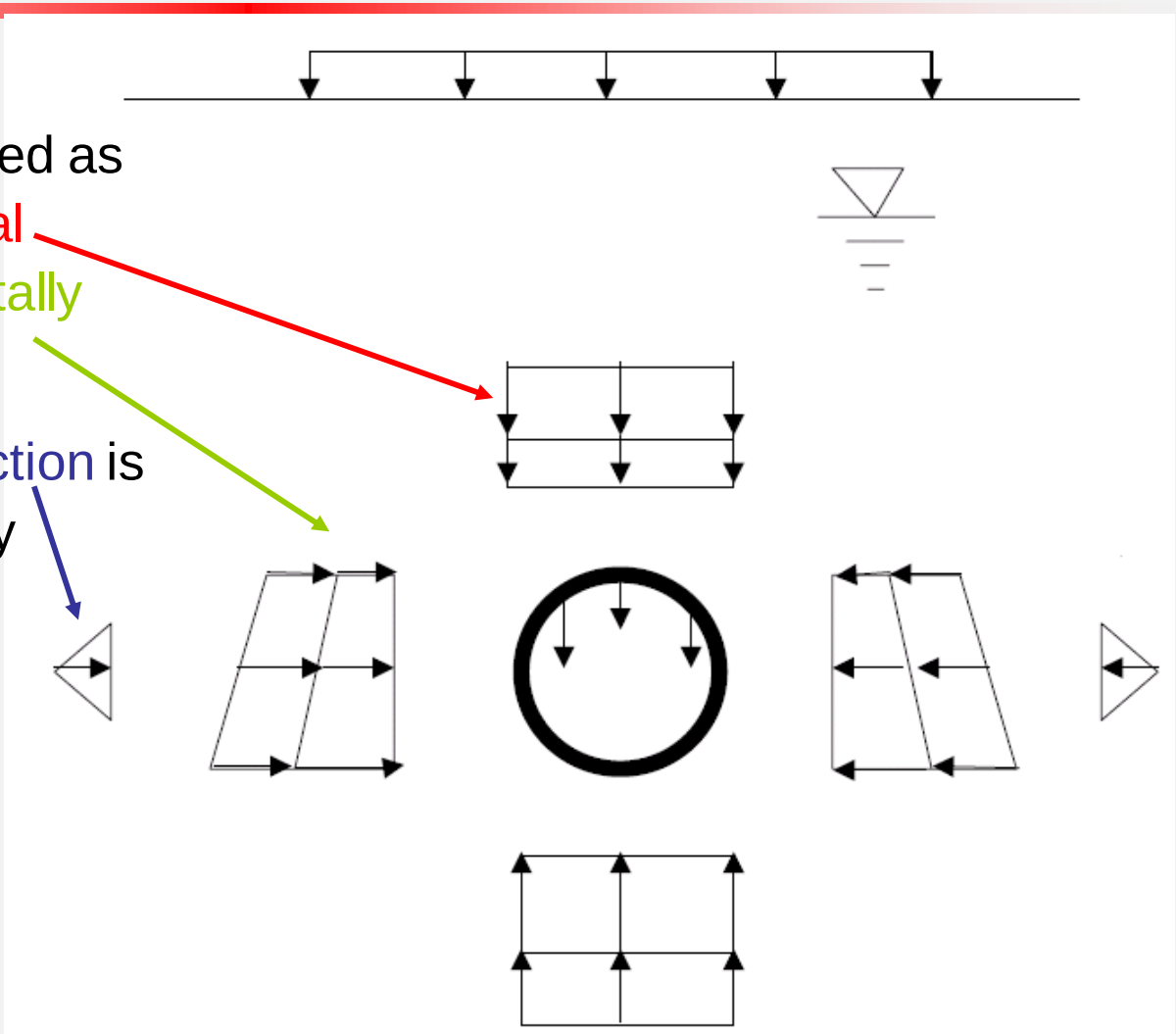

Load	Moment (M) (@R_c^2)	Axial Force (N) (@R_c)	Shear Force (S) (R_c)
Uniform load in vertical direction ($P=p_{e1}+p_{w1}$)	(1-2S2)@P/4	S2@P	-SC@P
Uniform load in lateral direction ($Q=q_{e1}+q_{w1}$)	(1-2C2)@Q/4	C2@Q	SC@Q
Triangular lyvarying load in lateral direction ($Q'=q_{e2}+q_{w2}$) (Q-Q')	-(6-3C-12C2+4C3)@(Q-Q')/48	-(C+8C2-4C3)@(Q-Q')/16	-(S+8SC-4SC2)@(Q-Q')/16
Subgrade reaction in lateral direction ($k\delta$)	$0 \leqq \theta \leqq \pi/4$ (0.2346-0.3536C)@ $k\delta$ $\pi/4 \leqq \theta \leqq \pi/2$ (-0.3487+0.5S2+0.2357C3) @ $k\delta$	$0 \leqq \theta \leqq \pi/4$ 0.3536C@ $k\delta$ $\pi/4 \leqq \theta \leqq \pi/2$ (-0.7071C+C2+0.7071S2C)@ $k\delta$	$0 \leqq \theta \leqq \pi/4$ 0.3536S@ $k\delta$ $\pi/4 \leqq \theta \leqq \pi/2$ (SC-0.7071C2S) @$k\delta$
Dead load (g)	$0 \leqq \theta \leqq \pi/2$ {(3/8) $\pi - \theta$ S-(5/6)C}@g $\pi/2 \leqq \theta \leqq \pi$ {- π/8+($\pi - \theta$)S-(5/6)C-(1/2) π S2} @g	$0 \leqq \theta \leqq \pi/2$ {θ S-(1/6)C}@g $\pi/2 \leqq \theta \leqq \pi$ {- π S+ θ S+ π S2-(1/6)C}@g	$0 \leqq \theta \leqq \pi/2$ {θ C+(1/6)S}@g $\pi/2 \leqq \theta \leqq \pi$ {-($\pi - \theta$)C+ θ S+ π SC-(1/6)S}@g
Lateral displacement at spring (δ)	δ ={(2P-Q-Q')+ π g}@R_c^4/{24(η EI/h+0.045k R_c^4)		

θ =Angle from crown

S=sin θ S2=sin$^2\theta$ S3=sin$^3\theta$ C=cos θ C2=cos$^2\theta$ C3=cos$^3\theta$

Bedded Frame Method

This method computes member forces with a matrix method and computer.

The model is multiple statically indeterminate.

It can evaluate the following conditions:

a) Non-uniformly varying load due to change of soil condition;
b) Eccentric loads;
c) Hydrostatic pressure;
d) Spring force to simulate subgrade reaction;
e) Effect of joint by simulating joints as hinges or rotation springs (semi-hinge).

Structural Design of Segment

Finite Element Method Numerical Modelling

Based on the theory of continuous body and has been adopted with the development of computer. In design by the FEM, the segmental lining is evaluated as a beam element.

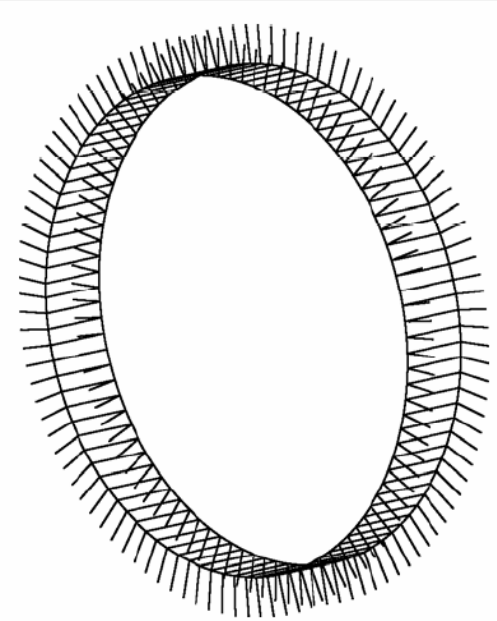

It computes not only the member forces of tunnel lining, but also the displacement and stress-strain state of the surrounding ground and the influence of tunnel construction on overlying or adjacent structures.

FEM Modelling

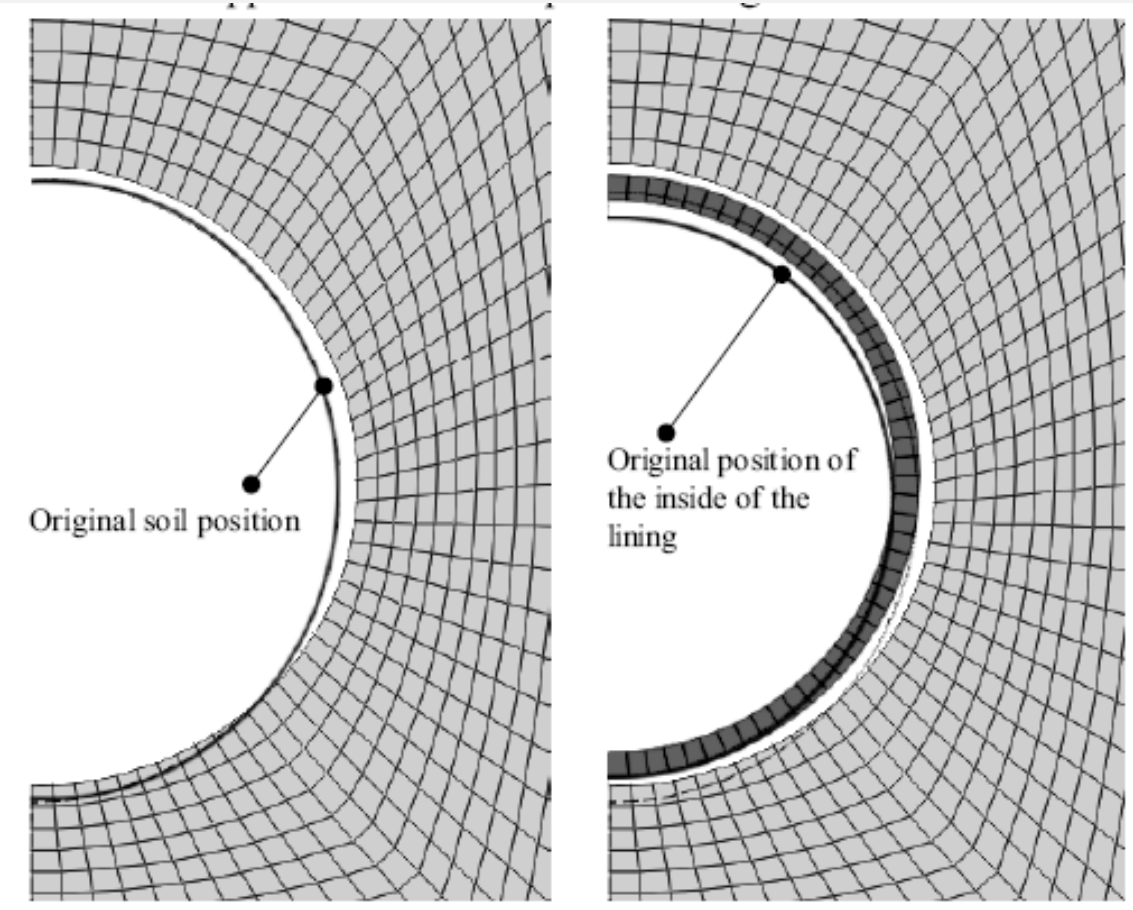

2D FEM modelling of load and deformation of the ground and the tunnel lining

FEM Modelling

3D FEM modelling of load and deformation of the ground and the tunnel lining

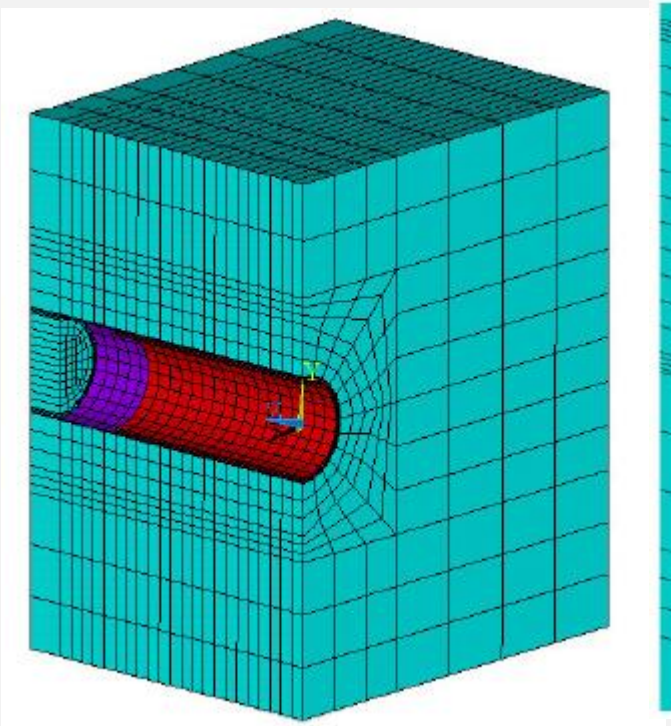

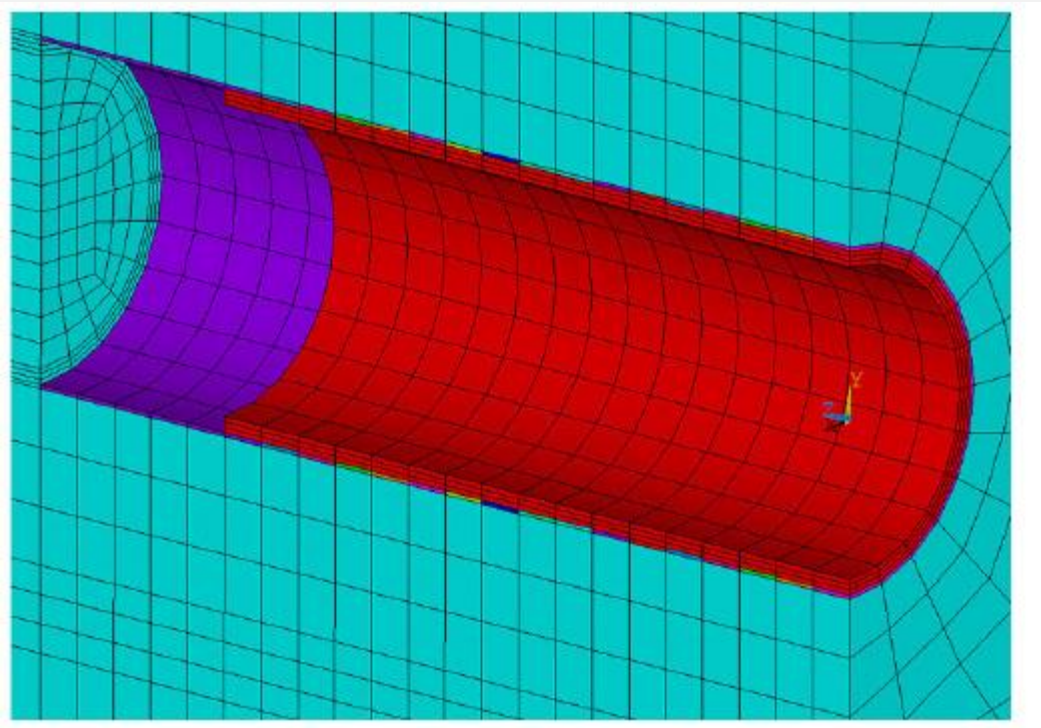

FEM Modelling - Advantages

FEM model can reproduce the ground behavior and ground-lining interaction realistically, in particular

a) The behavior of ground can be evaluated in consideration of the initial state of stress of ground, the parameters of ground such as unit weight of soil, Young modulus and Poisson's ratio, the shape and size of tunnel section, and the execution method, including its procedure.

b) The behaviour of the lining which resists the loads depends on the lining structure (number of segments, their configuration and joint type), the characteristics of the backfill grouting and its efficiency, and the loading given by the ground. These factors can be evaluated.

c) The degree of relaxation depends on the ground condition, the construction method (such as the type of shield method), and backfill grouting method, including the size of tail void. These factors can be evaluated.

Other analytical methods

1. Muir Wood (1975):
   A simple approach described by Muir Wood in 1975, in terms of assumed linear elastic characteristics of the ground and the lining
2. Lombardi (1979)

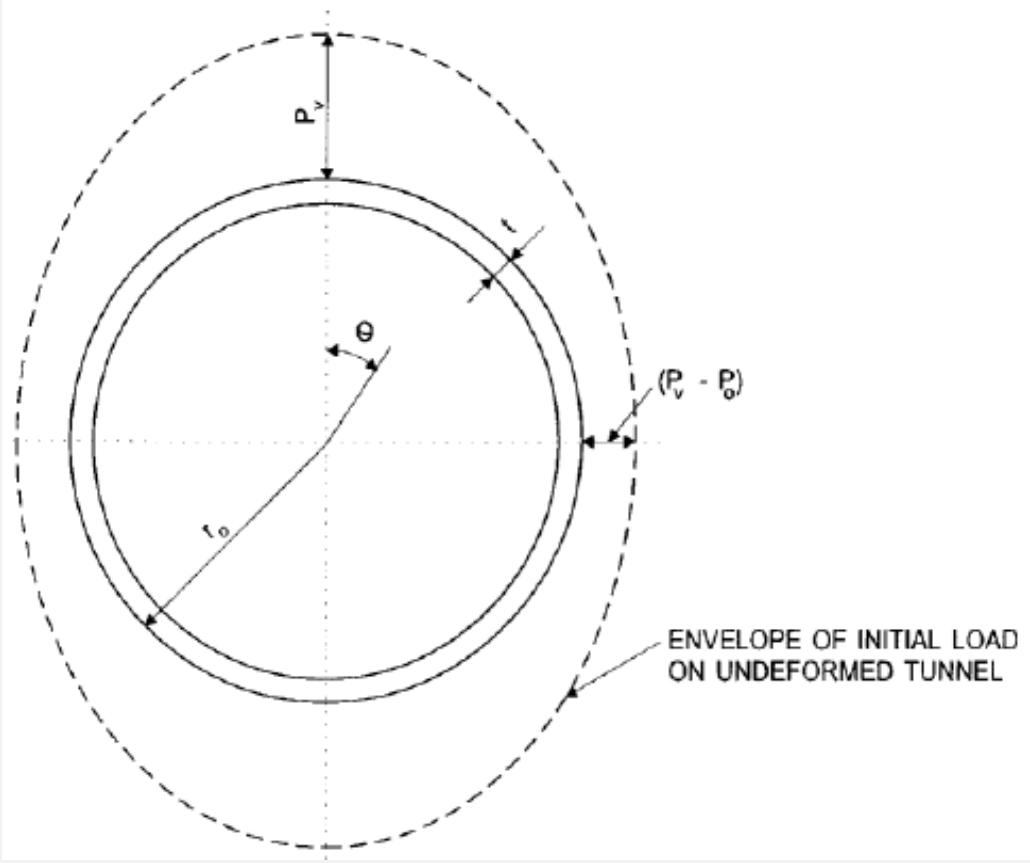

Limit state method closed-form solutions

It is by a maximum load criteria. The closed-form solutions are available for the simple conditions of a circular elastic tunnel lining embedded in a homogenous elastic ground, where the induced stresses are the assumed in situ stresses in the ground.

The closed-form solution presented in the following is based on the following simplifying assumptions:

1. Plain strain, elastic radial lining pressure are equal to in situ stresses, or a proportional thereof
2. It includes tangential bond between lining and ground.
3. Lining distortion and compression are resisted or relieved by ground reaction.
4. Vertical and lateral in situ stresses are σ_v and $K_0\sigma_v$.
5. Modulus and Poisson's ratio of the ground are E_r and ν_r.
6. Concrete lining modulus, moment of inertia, and area are E_c, I, and A, and mean radius is R

Limit state method closed-form solutions

Maximum and minimum bending moments can be determined by the following equation:

$$M = \pm \frac{\sigma_v (1 - K_0) R^2}{4 + (2 - 2\nu_r) / [3(1 + \nu_r)(3 - 4\nu_r)](E_r R^3 / E_c I)}$$

Maximum or minimum hoop force can be determined by the following equation:

$$N = \frac{\sigma_v (1 + K_0) R}{2 + 2(1 - K_0)(1 - \nu_r) / [(1 + \nu_r)(1 - 2\nu_r)](E_r R / E_c A)} \pm \frac{\sigma_v (1 - K_0) R}{(2 + 4\nu_r) / [(1 + \nu_r E_r R^3) / \{(3 - 4\nu_r)[12(1 + \nu_r) E_c I + E_r R^3]\}}$$

Limit state method closed-form solutions

Maximum or minimum radial displacement equation:

$$\frac{u}{R} = \frac{\sigma_v (1+K_0) R^3}{[2/(1+\nu_r)] E_r R^3 + 2E_c A R^2 + 2E_c I} \pm \frac{\sigma_v (1-K_0) R}{(3-2\nu_r)/[(1+\nu_r)(3-4\nu)] E_r R^3 + 12 E_c I]}$$

These simplifying assumptions are hardly ever met in real life and presume essentially the lining “wished in place” into the ground. Nonetheless, the equations are useful in examining the effects of variations of important parameters. The maximum moment is controlled by the flexibility ratio:

$$\alpha = \frac{E_r R^3}{E_c I}$$

Limit state method closed-form solutions

For a large value of the flexibility ratio (large soil or rock mass modulus), the moment becomes very small.
For a small value (very rigid lining), the moment is large.
If the rock mass modulus is zero, the rock does not restrain the movement of the lining, and the maximum moment in the lining is:

$$M = 0.25\sigma_v(1-K_0)R^2$$

With K_0=1 (uniform stress field) the moment is zero and with K_0=0 (simple vertical loading of vertical ring) the moment is maximum

Check the Safety of Section

According to the calculation result of member forces, the safety of the most critical sections must be checked using the limit state design method or the allowable stress design method.

These are as follows:

1. Section with the **maximum positive moment**;
2. Section with the **maximum negative moment**;
3. Section with the **maximum axial force**.

The safety of the lining against the thrust force of the shield jacks should be checked.

Segment Joint and Others

If the segmental lining is jointed with or without bolts, its actual **flexural rigidity at the joint is smaller than the flexural rigidity of the segment**.

The segmental ring can be modelled in 2 different ways:

- a multiple hinged ring
- a lining having a rigidity between a perfectly uniform rigid ring and a multiple hinged ring

If the segments are staggered, *the moment at the joint is smaller than the moment of the adjacent segment*. The actual effect of the joint should be evaluated in the design. At joints, **bolts are evaluated as reinforcement**.

Segment Joint and Others

The **safety** of the joint should be checked by the same method as that used to check the safety of segment. Since the locations of joints are indefinite before the segments are assembled, the design calculation should be done for the **three most critical sections**.

Joint of K-segment inserted in longitudinal direction

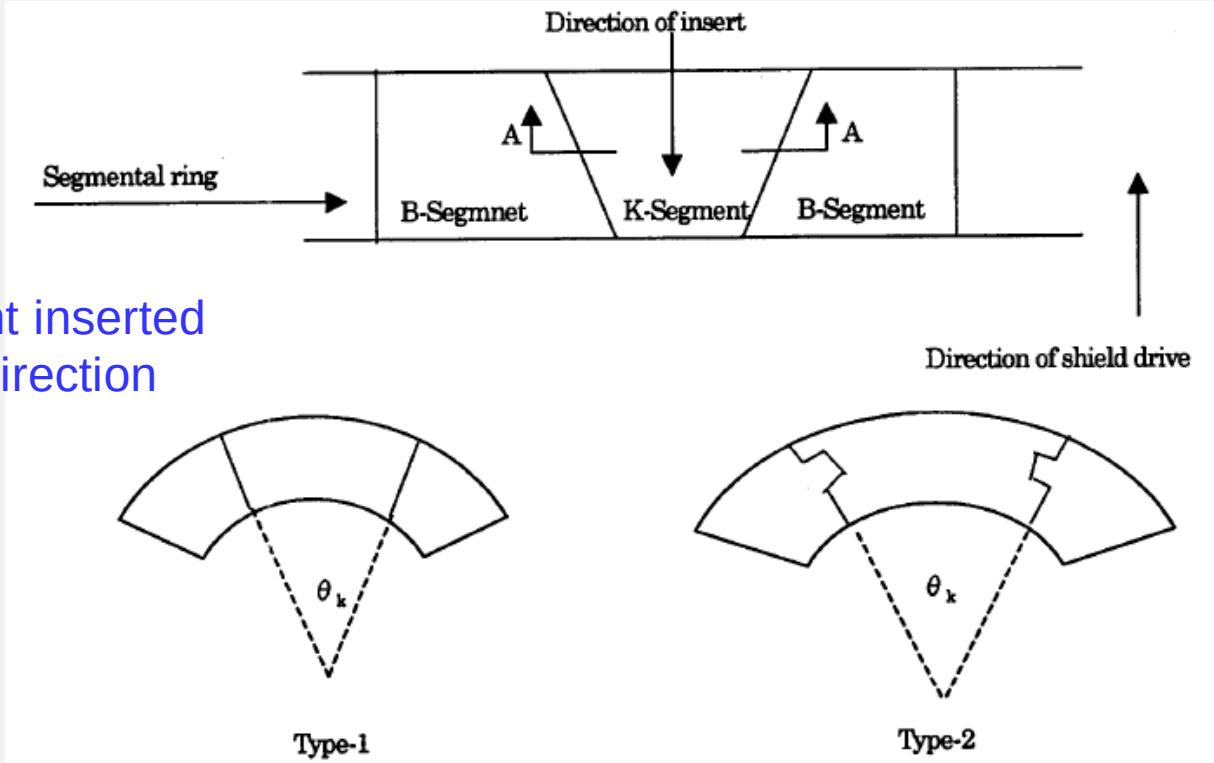

Segment Joint and Others

Between rings, the force to be transferred from one ring to another is governed by geometric interlock, and **micro-cracks** in the segment are propagated by the thrust force of the shield jacks.

influence on the durability of the segmental lining

The quality control for tensile strength of concrete of segment should be considered in order to prevent an increase in micro-cracks when the segments are produced

Waterproof of Segmental Lining

Water-tightness requirements should be determined based on the ultimate use and the functional requirements of the finished tunnel:

1. If allowable **leakage** discharge is designed → a **drainage system** can be installed in the tunnel.
2. If **not** → measures against leakage (*waterproofing*) are necessary.

If a **final lining** will be placed (cast in place concrete) the inner lining should be sufficiently tight to permit its placement → **Sealing strips** should then be applied as necessary

Waterproof of Segmental Lining

Lining segments **below the groundwater table** should be furnished with **one or two gaskets** to seal the tunnel.

If **only one gasket** is used, then provisions should be made to place **caulking if excessive leakage** should occur.

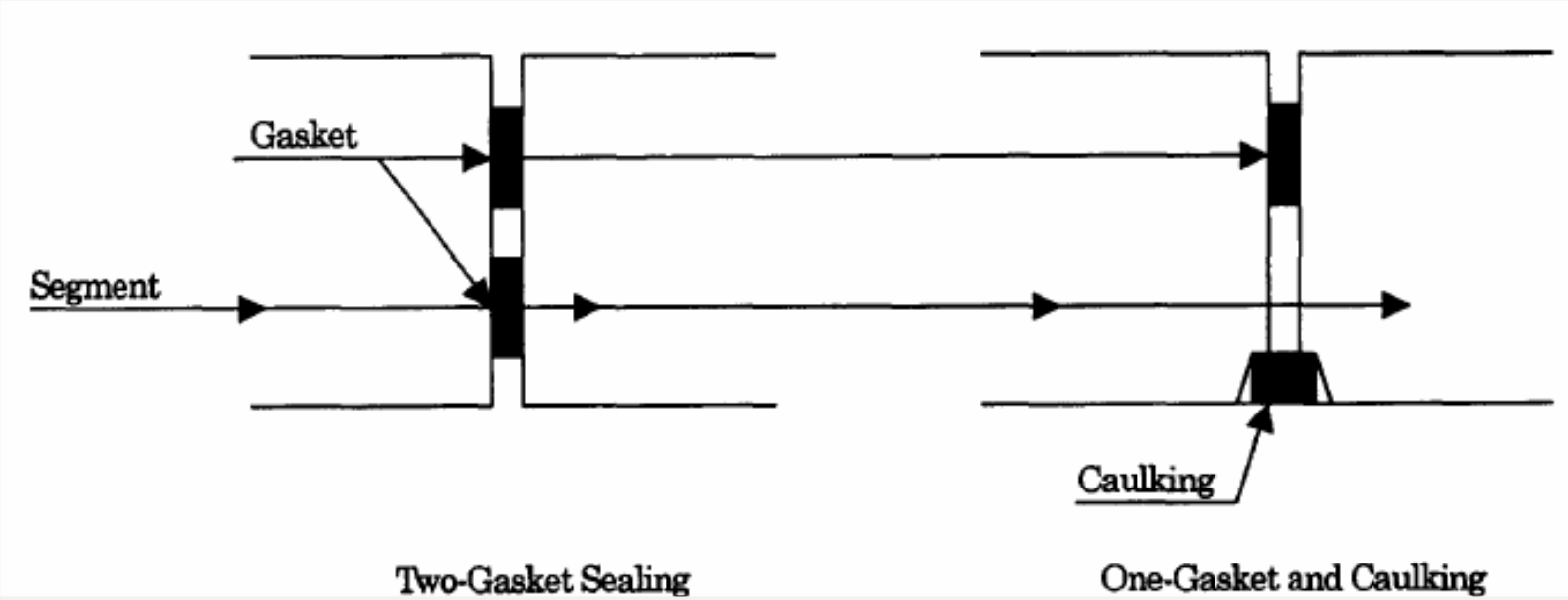

Waterproof of Segmental Lining

If leakage cannot be stopped by gasket sealing and the caulking, **urethane injection** may be effective.

Urethane is injected through holes made in the segment; the urethane then reacts with groundwater and **expands** to protect against water invasion.

Where **groundwater is aggressive** to components of the lining or components installed in the tunnel, **full waterproofing should be applied**, including the use of waterproof concrete or external waterproofing of segments, or both.

Segment Dimension General

Relating to tunnel inner diameter

Thickness

- Small diameter (2~5 m): t = 15~25 cm
- Medium diameter (5~8 m): t = 20~40 cm
- Large diameter (>8 m): t = 30~75 cm

If sealing gasket is necessary, t should be increased by 5 cm.

Width

- Small diameter (2~5 m): 75~150 cm
- Medium diameter (5~8 m): 125~200 cm
- Large diameter (>8 m): 150~225 cm

Segment numbers per ring

- Small diameter (2~5 m): 4~5 normal, 1 key
- Medium diameter (5~8 m): 5~6 normal, 1 key
- Large diameter (>8 m): 6~8 normal, 1 key

Permanent Support Methods

- Even if some rock-bolts can never be taken into account as permanent support (split-set, swellex, anchor-type without grout, etc), very often their contribution is not taken into account at all, for security reasons
- Shotcrete could also be taken, as well as temporary support, as a contribution to the permanent support. However, because of durability issues, there is still debate on this issue
- That is why when we talk about permanent support measures, we normally refer to permanent inner concrete linings or the concrete segments put in place by TBM's
- This concrete lining can also be due for functional reasons (ventilation, lighting, aerodynamics, etc)

Permanent Support Methods

Permanent Support Methods: Concrete lining

Permanent Support Methods

Permanent Support Methods: Concrete lining

- The usual thickness of a permanent lining is at least 25 cm, being of 35 cm for reinforced and watertight linings
- Blocks of 8 to12 m in length are usually separated with extension joints
- Normal concretes type C20/25 are employed, as more resistant concretes develop higher temperatures and are more prone to develop fissures
- The concrete is poured into rolling formworks and compacted with vibrators
- Possibly unfilled parts should be regrouted after concreting, avoiding a too high pressure that might damage the concrete lining

Permanent Support Methods

Permanent Support Methods: Reinforced Concrete Lining

- Very often the concrete is not reinforced, as the loads acting on it are not very well known and produce most of all compression within the concrete shell. However, steel bars will « sew » construction joints and normally reinforce the invert, very subjected to high loads
- The loads to be withstand cover those exerted by the rock, own weight, shrinkage, temperature differences, aerodynamic pressure, etc
- When it is reinforced, the cage is prefabricated in situ